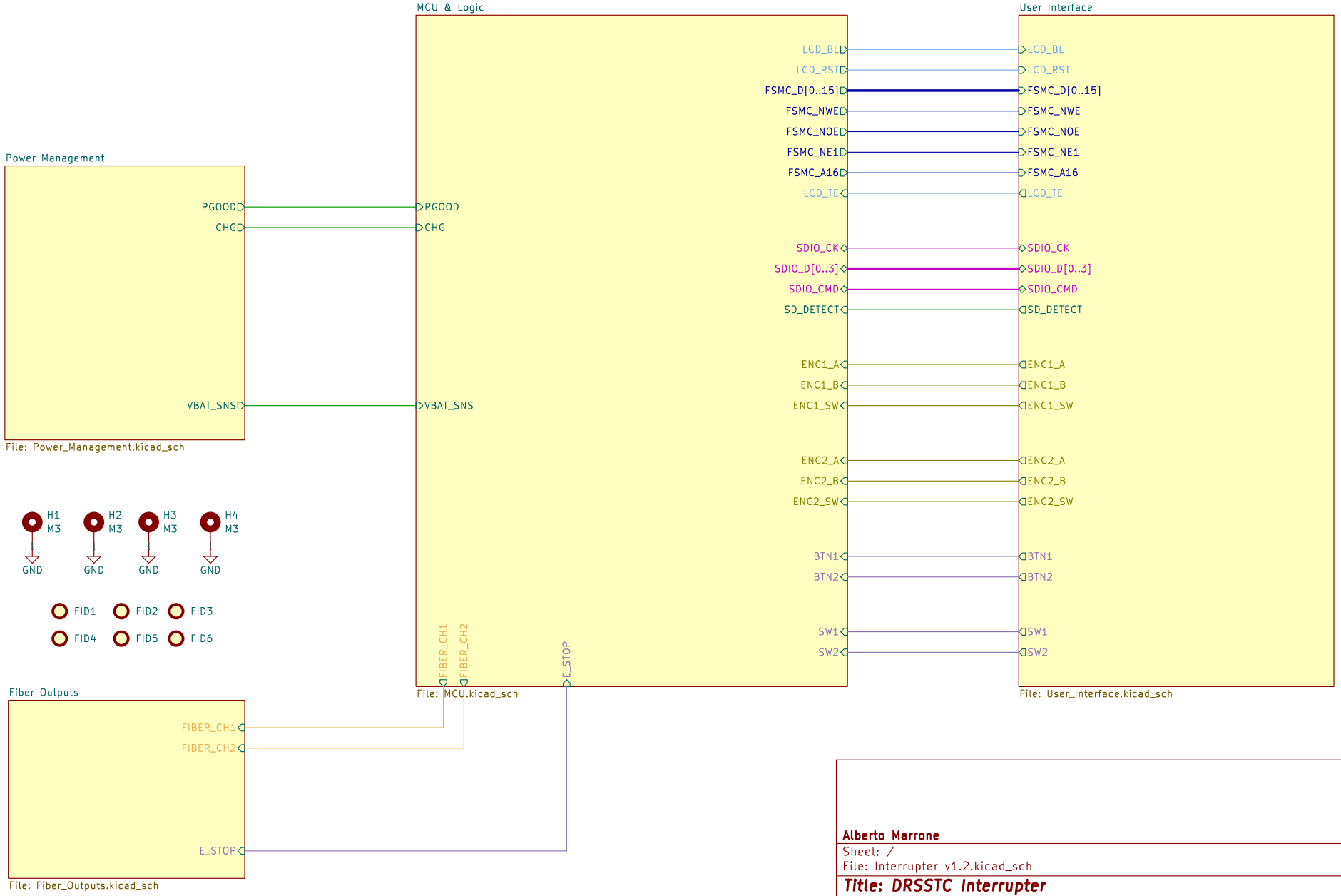

Alberto Marrone

Sheet: /
File: Interrupter v1.2.kicad_sch

Title: DRSSTC Interrupter

Size: A4	Date: 2026-02-20	**Rev: v1.2**
KiCad E.D.A. 9.0.7		Id: 1/5

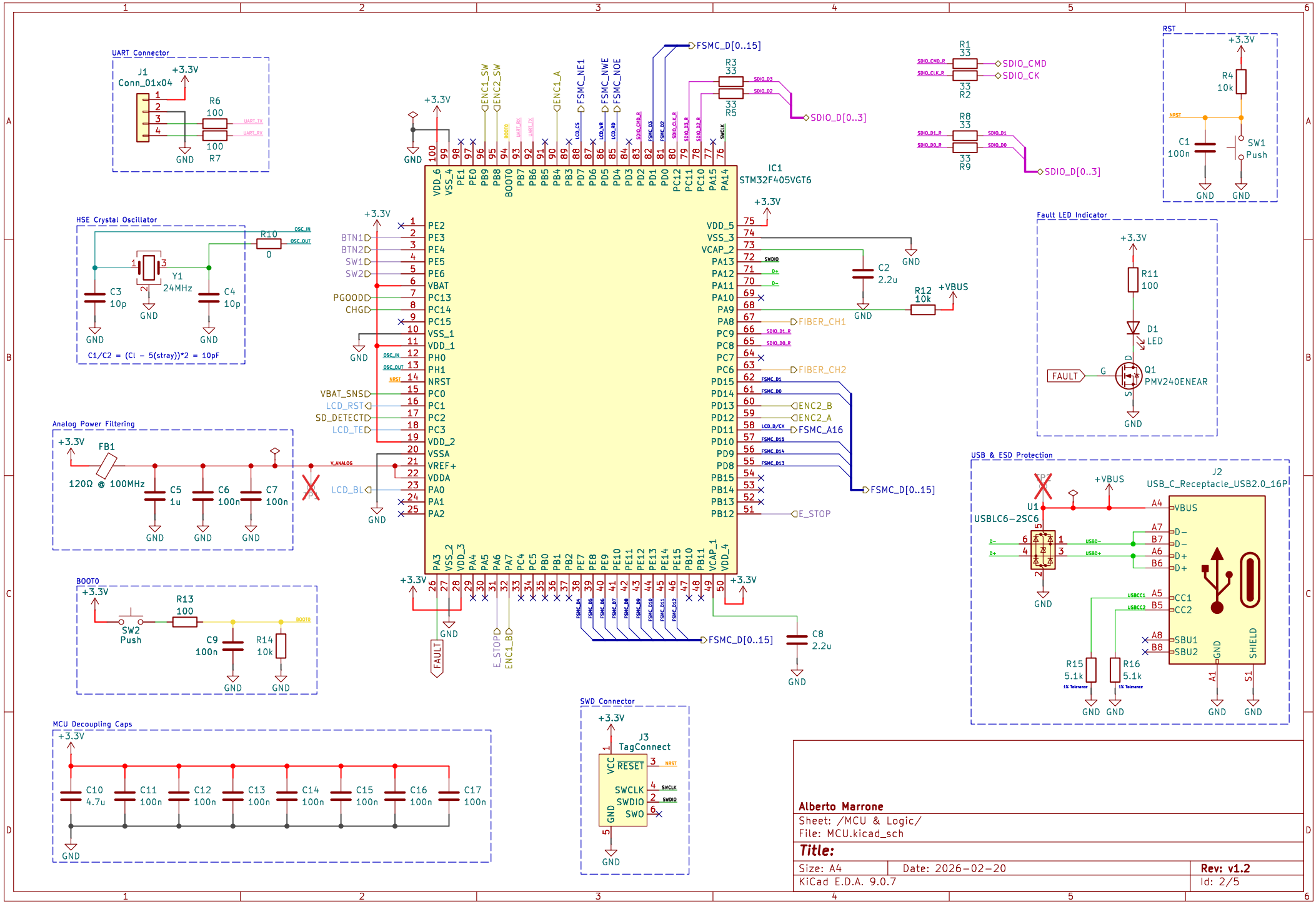

Alberto Marrone

Sheet: /MCU & Logic/

File: MCU.kicad_sch

Title:

Size: A4	Date: 2026-02-20	Rev: v1.2
KiCad E.D.A. 9.0.7		Id: 2/5

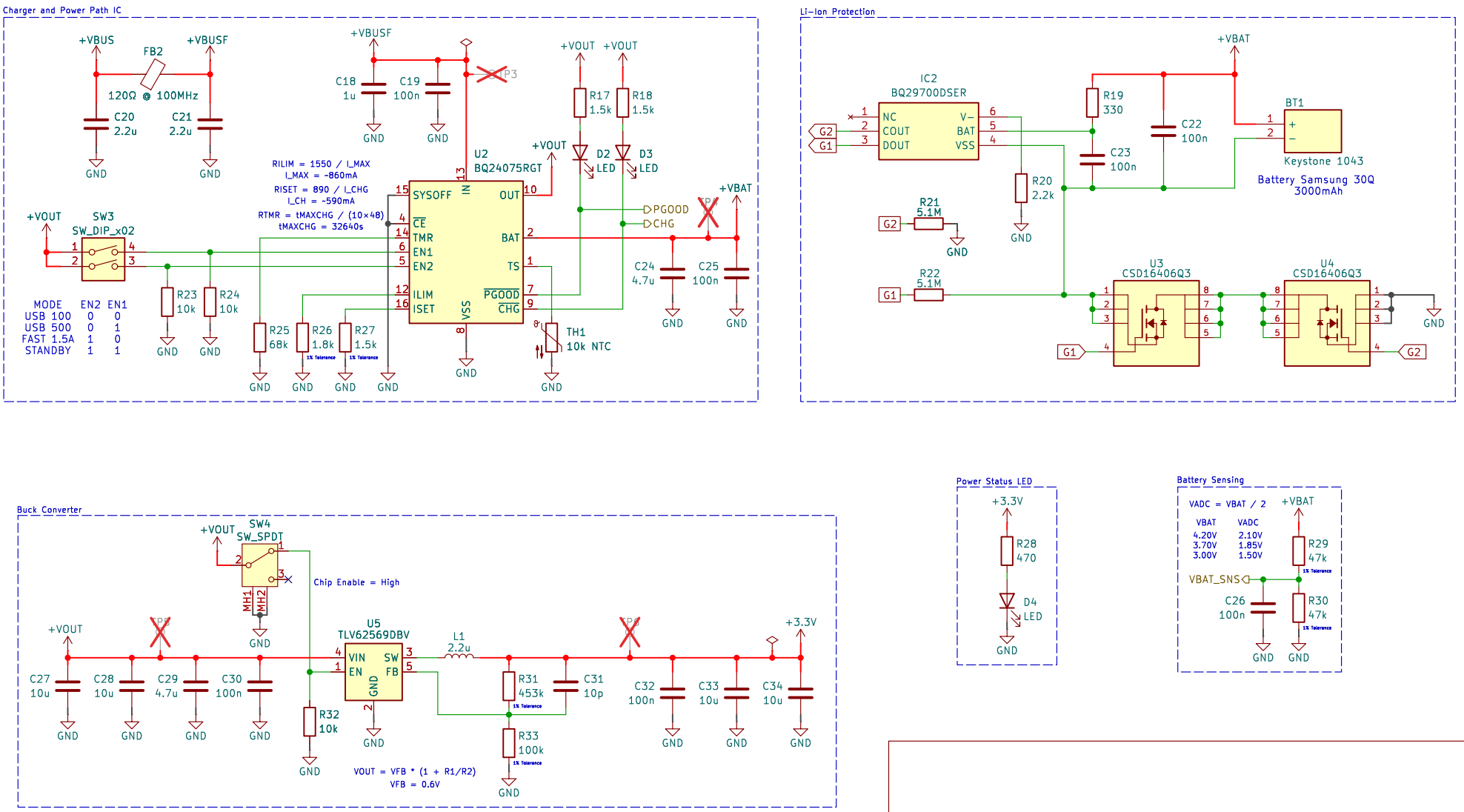

Alberto Marrone

Sheet: /Power Management/

File: Power_Management.kicad_sch

Title:

Size: A4	Date: 2026-02-20	**Rev: v1.2**
KiCad E.D.A. 9.0.7		Id: 3/5

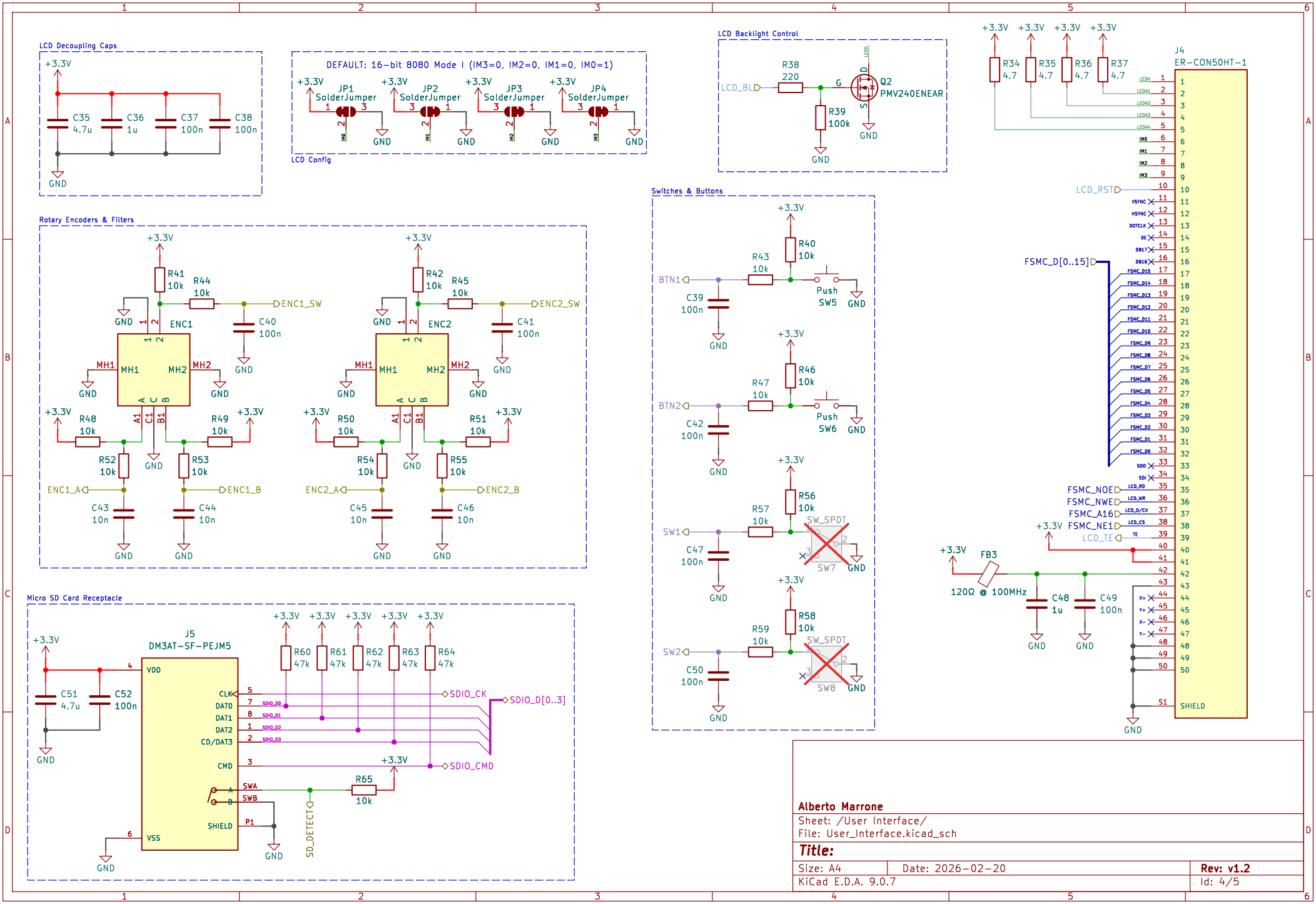

Alberto Marrone

Sheet: /User Interface/
File: User_Interface.kicad_sch

Title:

Size: A4	Date: 2026-02-20	**Rev: v1.2**
KiCad E.D.A. 9.0.7		Id: 4/5

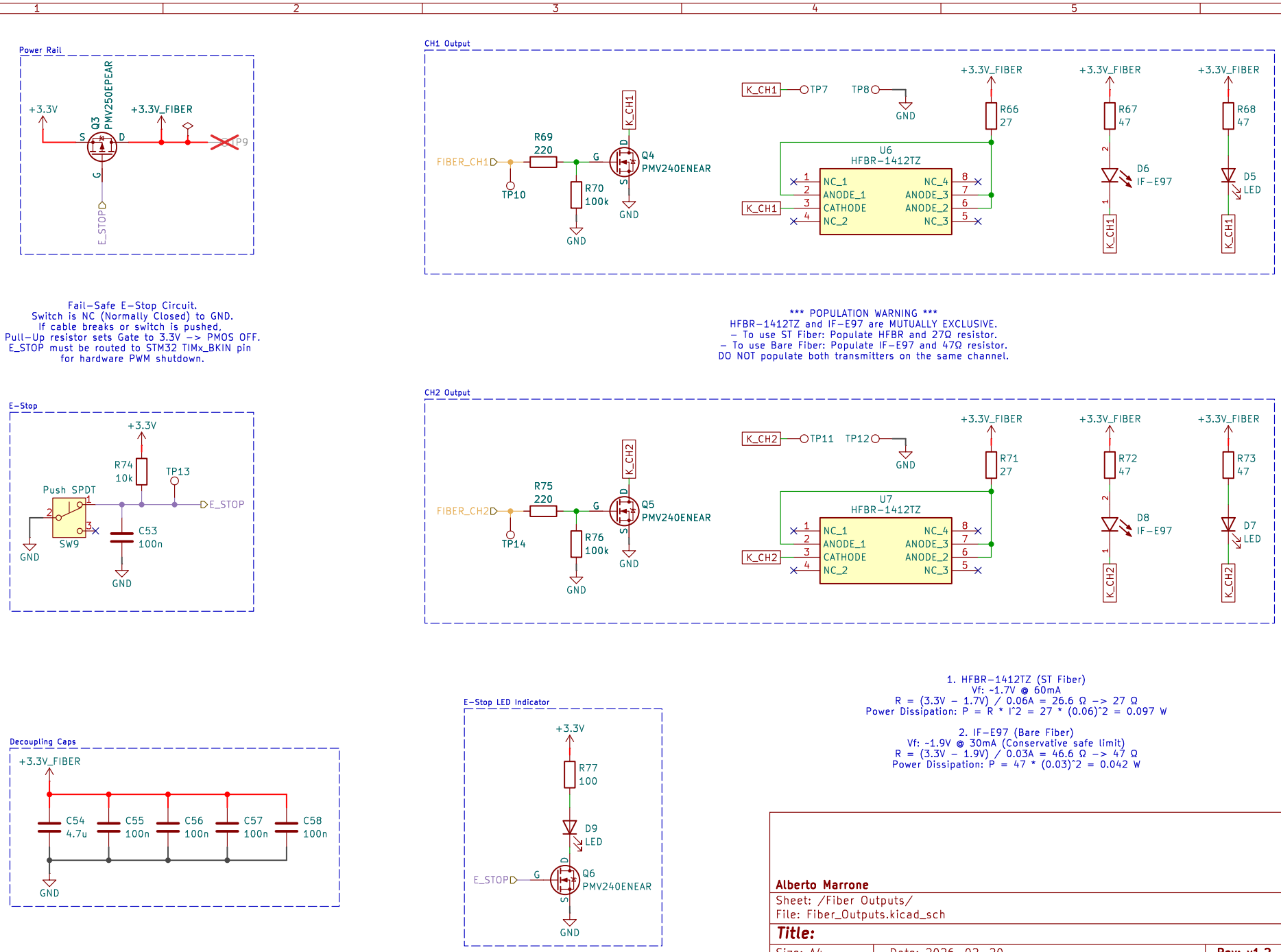

Alberto Marrone

Sheet: /Fiber Outputs/

File: Fiber_Outputs.kicad_sch

Title:

Size: A4	Date: 2026-02-20	Rev: v1.2
KiCad E.D.A. 9.0.7		Id: 5/5