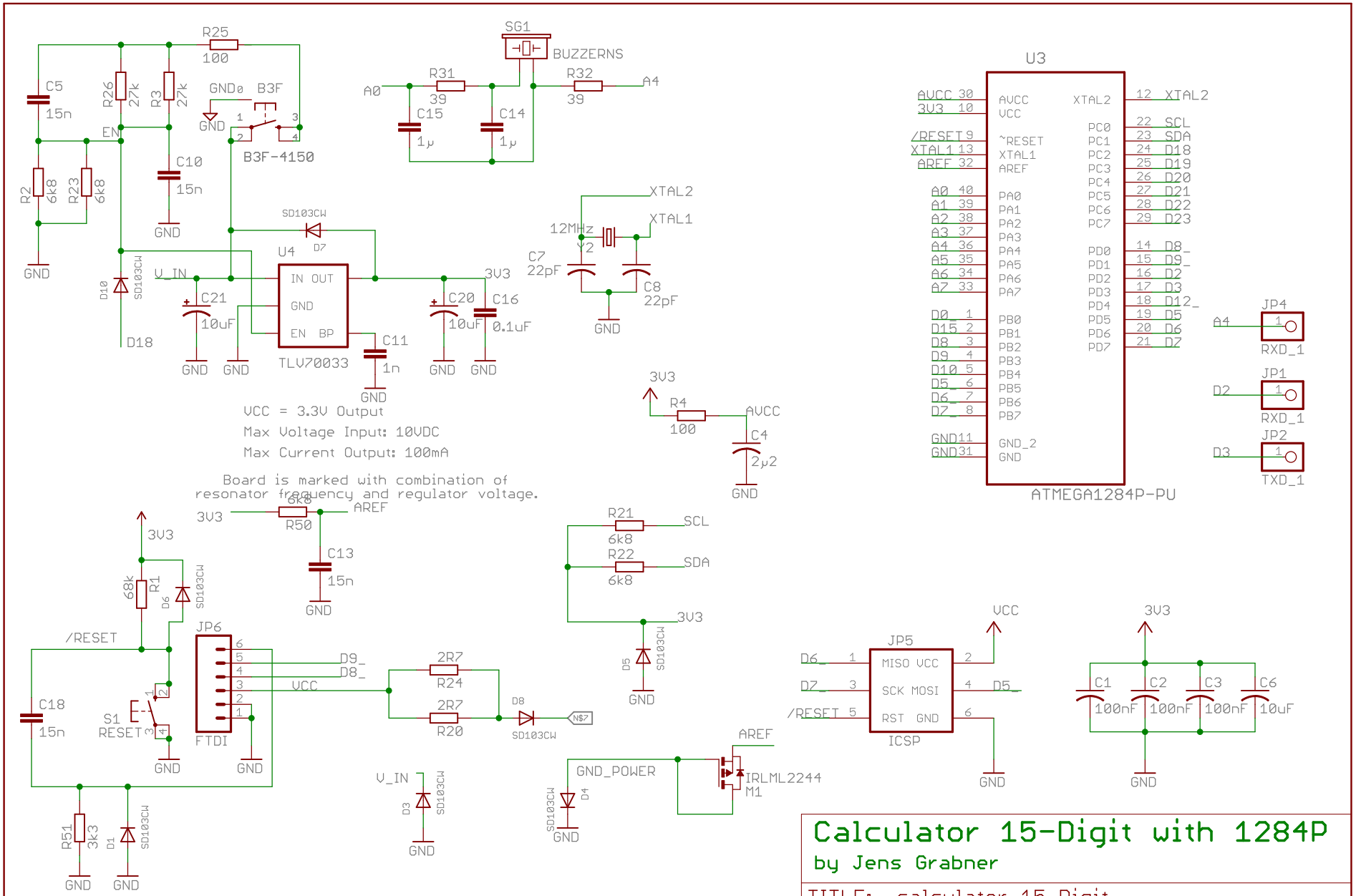

Calculator 15-Digit with 1284P

by Jens Grabner

TITLE: calculator_15-Digit

Document Number:

REV: 0.8

Date: 13.04.2017 09:43:06

Sheet: 1/3

Copyright CERN 2013

OSHW LOGO OSHW LOGO

Calculator 15-Digit with ATmega1284P by Jens Grabner is licensed under the CERN OHL v.1.2 or later. (http://ohwr.org/cernohl)

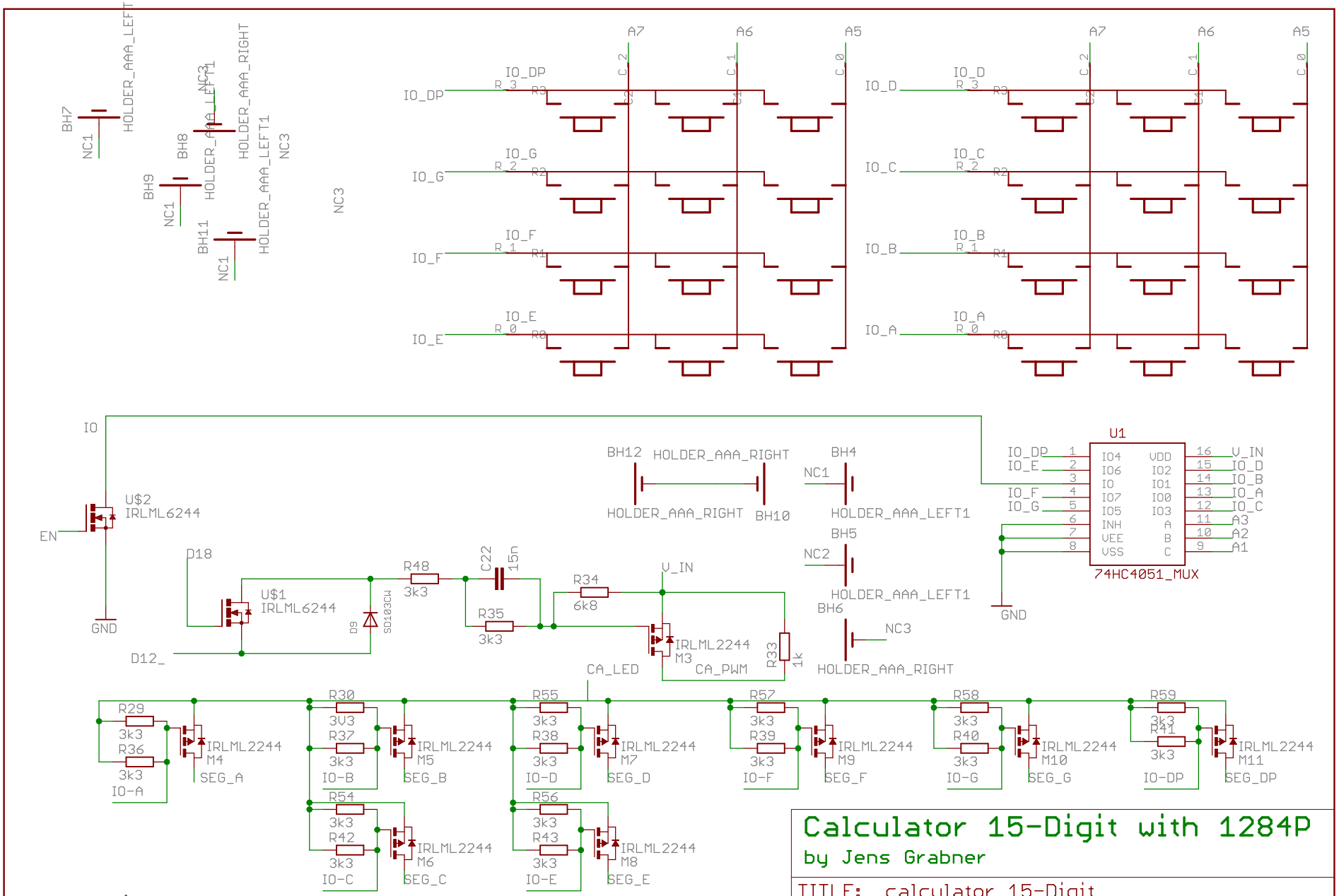

Calculator 15-Digit with 1284P

by Jens Grabner

TITLE: calculator_15-Digit

Document Number:

REV: 0.8

Date: 13.04.2017 09:43:06

Sheet: 2/3

Copyright CERN 2013

Calculator 15-Digit with ATmega1284P by Jens Grabner is licensed under the CERN OHL v.1.2 or later. (http://ohwr.org/cernohl)

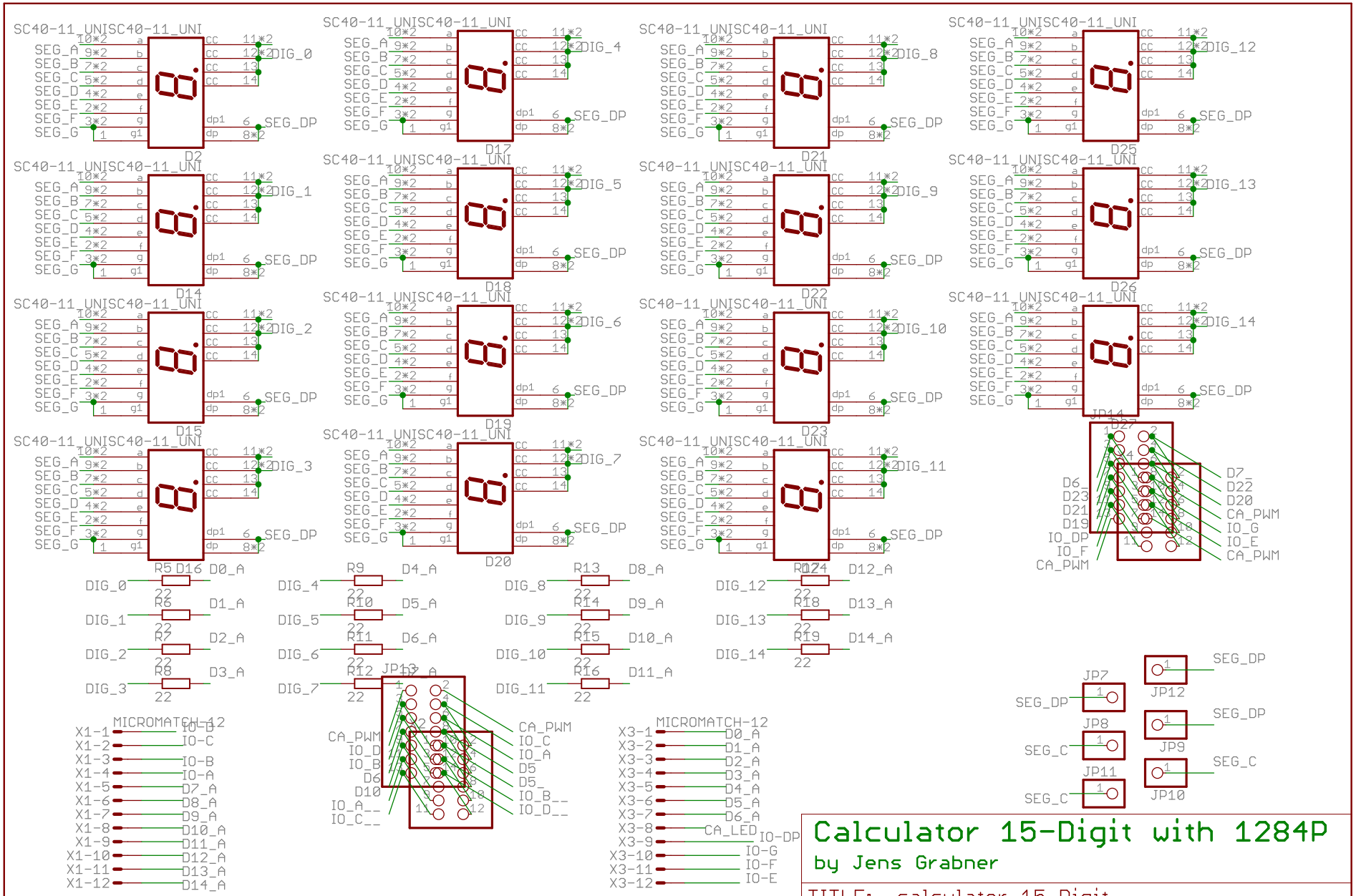

Calculator 15-Digit with 1284P

by Jens Grabner

TITLE: calculator_15-Digit

Document Number:

REV: 0.8

Date: 13.04.2017 09:43:06

Sheet: 3/3

Copyright CERN 2013

Calculator 15-Digit with ATmega1284P by Jens Grabner is licensed under the CERN OHL v.1.2 or later. (http://ohwr.org/cernohl)