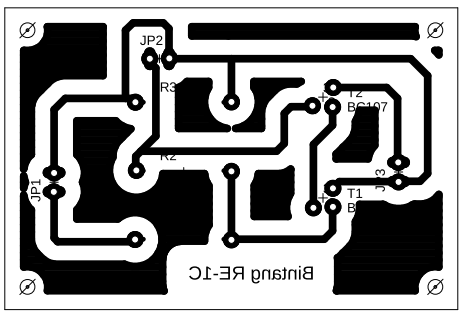
JP2
R3
T2
BC107
R2
JP1
T1
JP3
Bintang RE-1C

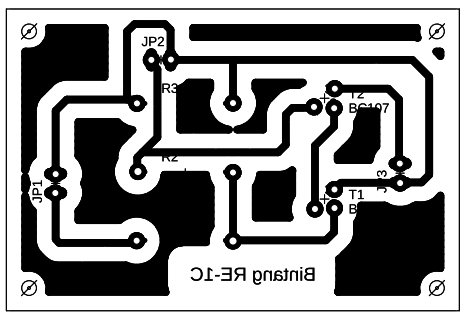
JP2
R3
T2
BC107
R2
JP1
T1
JP3
Bintang RE-1C

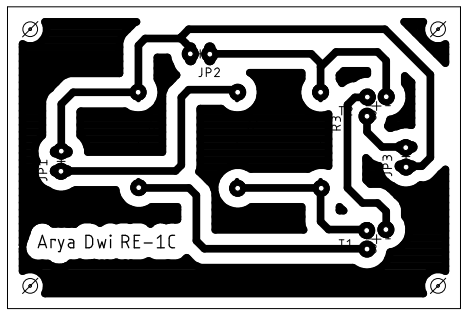
JP2
R3
JP1
T1
JP3
Arya Dwi RE-1C

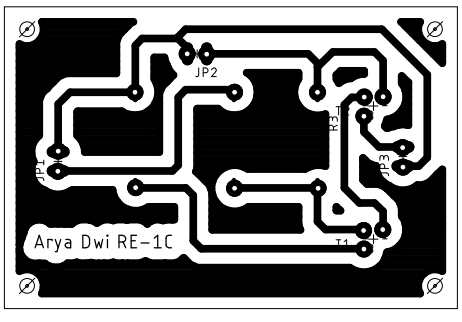
JP2
R3
JP1
T1
JP3
Arya Dwi RE-1C

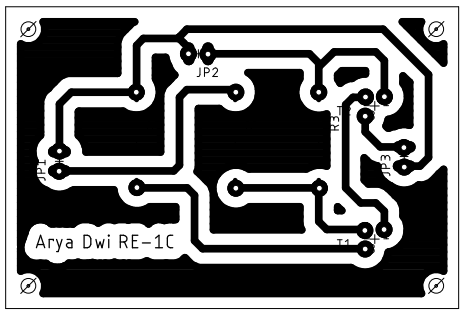
JP2
R3
JP1
T1
JP3
Arya Dwi RE-1C

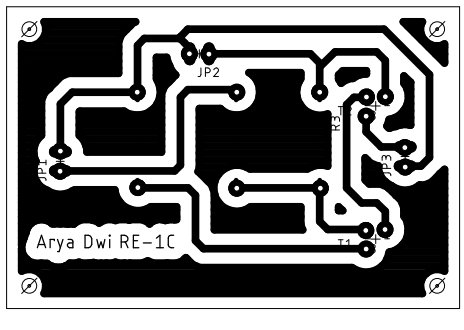
JP2
R3
JP1
T1
JP3
Arya Dwi RE-1C

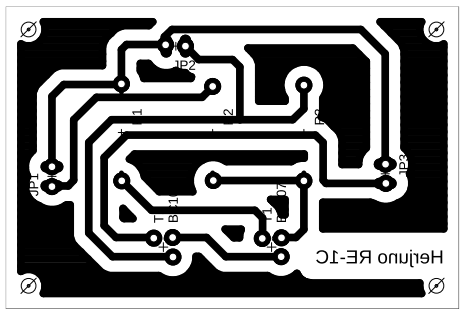
JP2
T 1
B 1
T 2
B 2
JP1
T1
BC107
JP3
Herjuno RE-1C

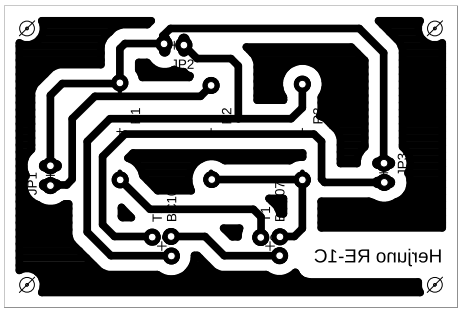
JP2
T 1
B 1
T 2
B 2
JP1
T1
BC107
JP3
Herjuno RE-1C

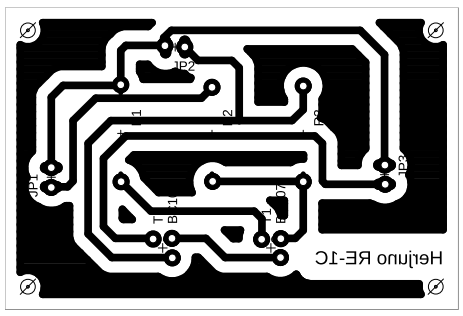
JP2
T 1
B 1
T 2
B 2
JP1
T1
BC107
JP3
Herjuno RE-1C

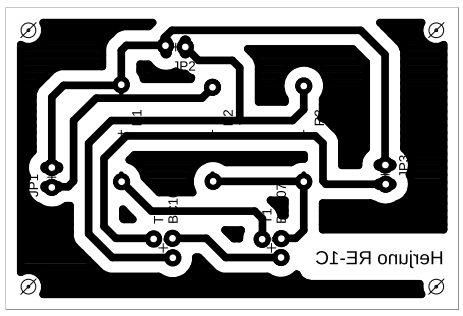
JP2
T 1
B 1
T 2
B 2
JP1
T1
BC107
JP3
Herjuno RE-1C