Challenges

Mini challenge 3

MCR²

Manchester **Robotics**

Mini challenge 3

- This challenge consists of the simulation and control of multiple robots.
- The student must use the previous puzzlebot kinematic simulator and use the knowledge of parameters, namespaces and Transforms in ROS2 to define a multi Puzzlebot simulator.

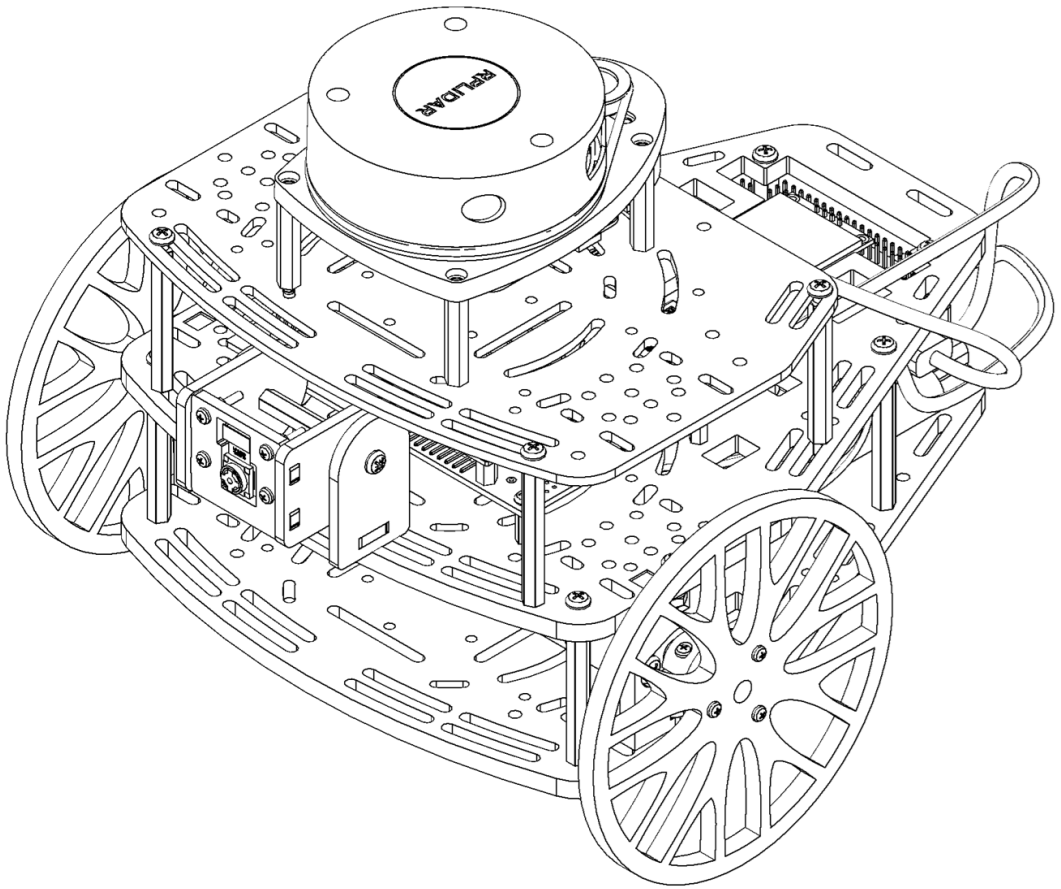

Mini challenge 3

- As stated before, this activity consists of creating multiple groups of nodes to simulate and control multiple robots.
- Simulate multiple nonholonomic robot (e.g., Puzzlebot) using ROS2.
- Every robot must contain its own joint state publisher, kinematic simulation, controller and localisation node.
- Each robot must be independently controlled.

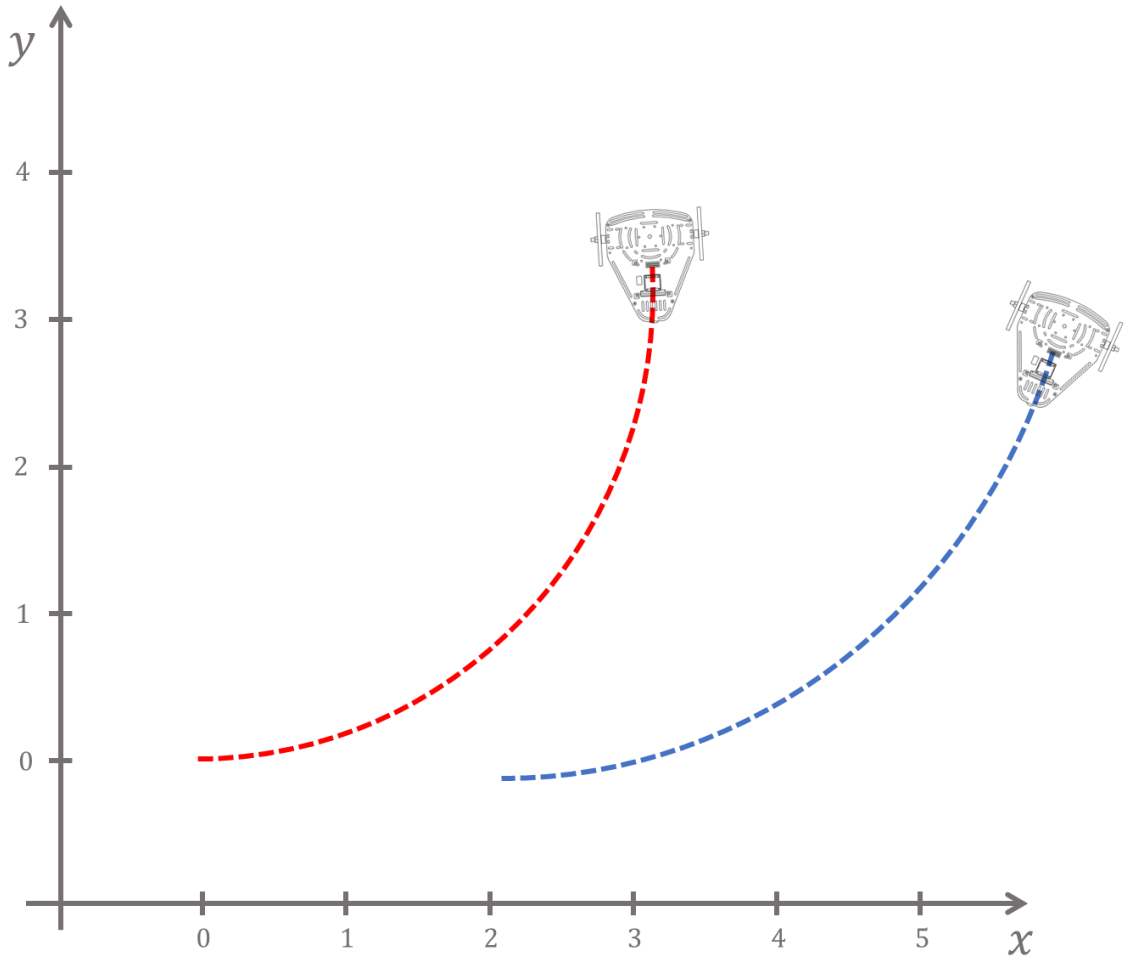

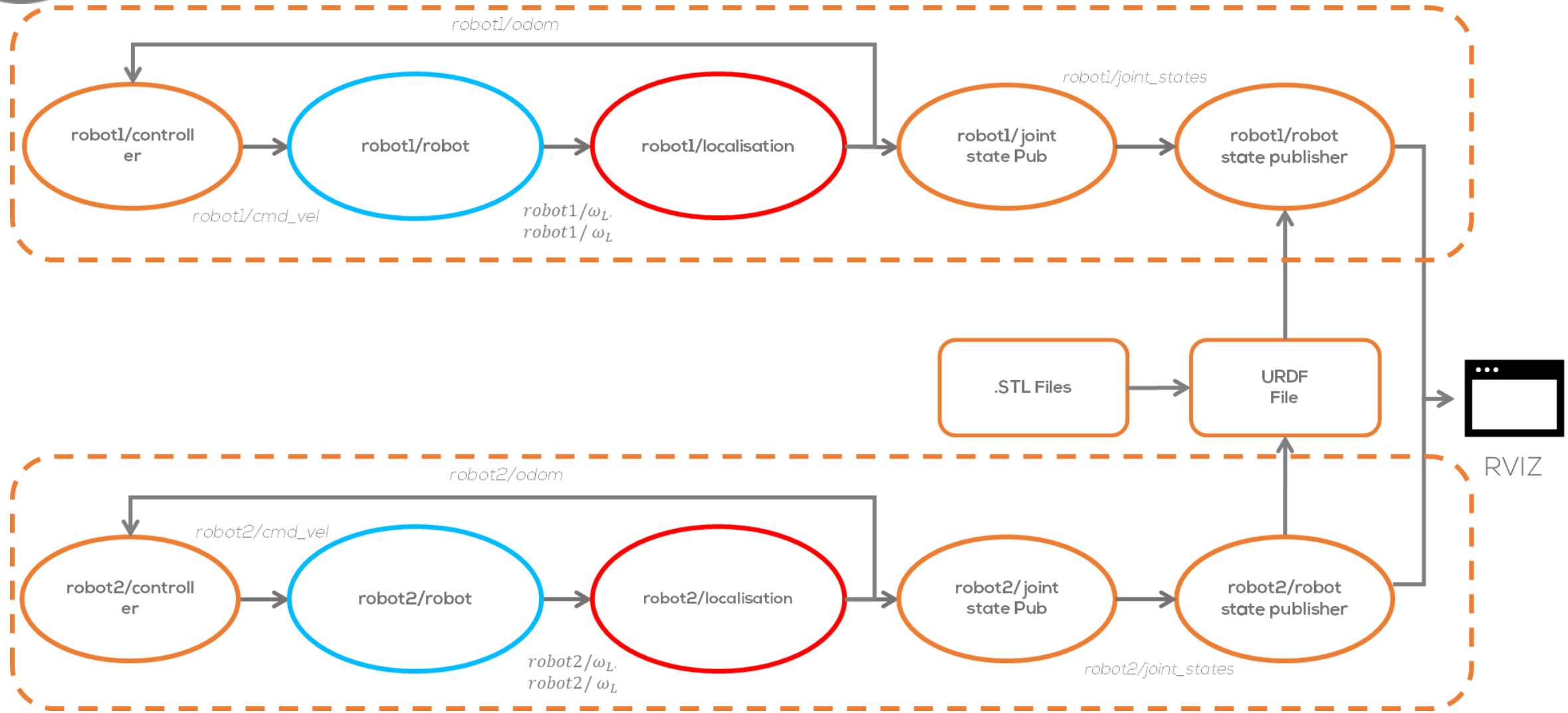
robot1/odom
robot1/controll er
robot1/robot
robot1/localisation
robot1/joint_states
robot1/ joint state Pub
robot1/robot state publisher
robot1/cmd_vel
$robot1/\omega_L$,
$robot1/\omega_L$
.STL Files
URDF File
RVIZ
robot2/odom
robot2/cmd_vel
robot2/controll er
robot2/robot
robot2/localisation
robot2/ joint state Pub
robot2/robot state publisher
$robot2/\omega_L$,
$robot2/\omega_L$
robot2/joint_states

Mini challenge 3

- The student must define two groups using namespaces “robot1” and “robot2” respectively.
- The student must use namespaces and parameters to avoid naming conflicts for transforms and topics.
- The student must define different initial positions for each robots and different set points to control them.

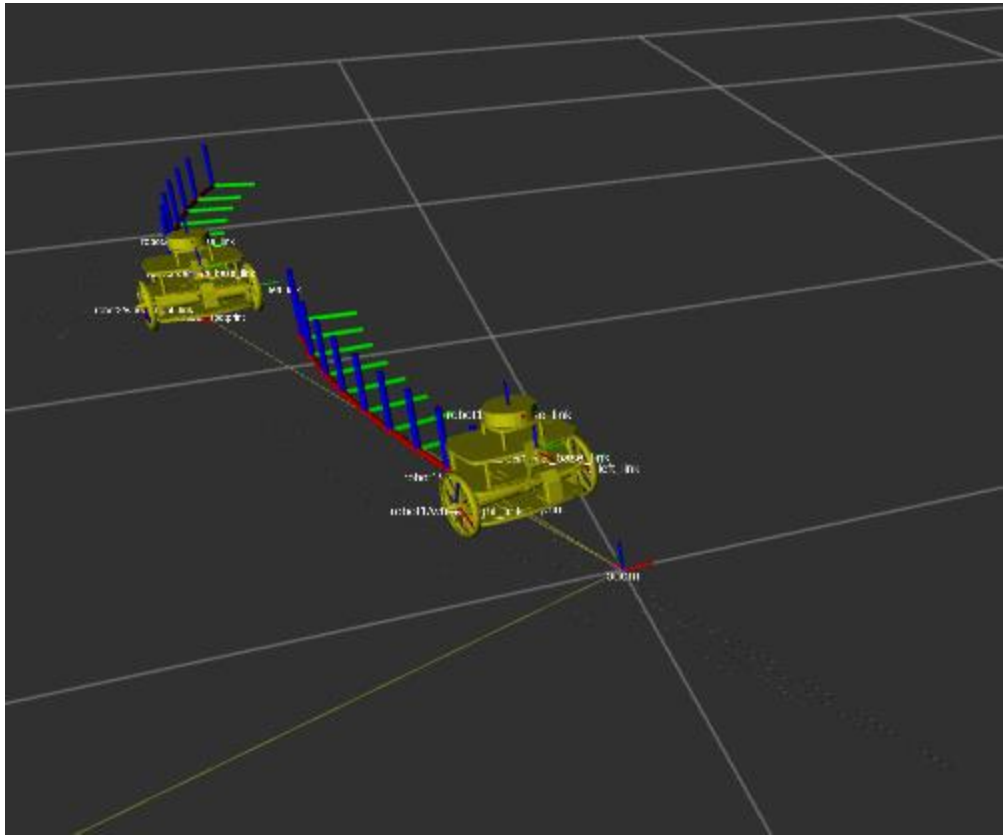

Mini challenge 3: Extra (optional)

- Use substitutions and arguments to define a single reusable launch file and use it for two robots.
- More information about substitutions can be found here.

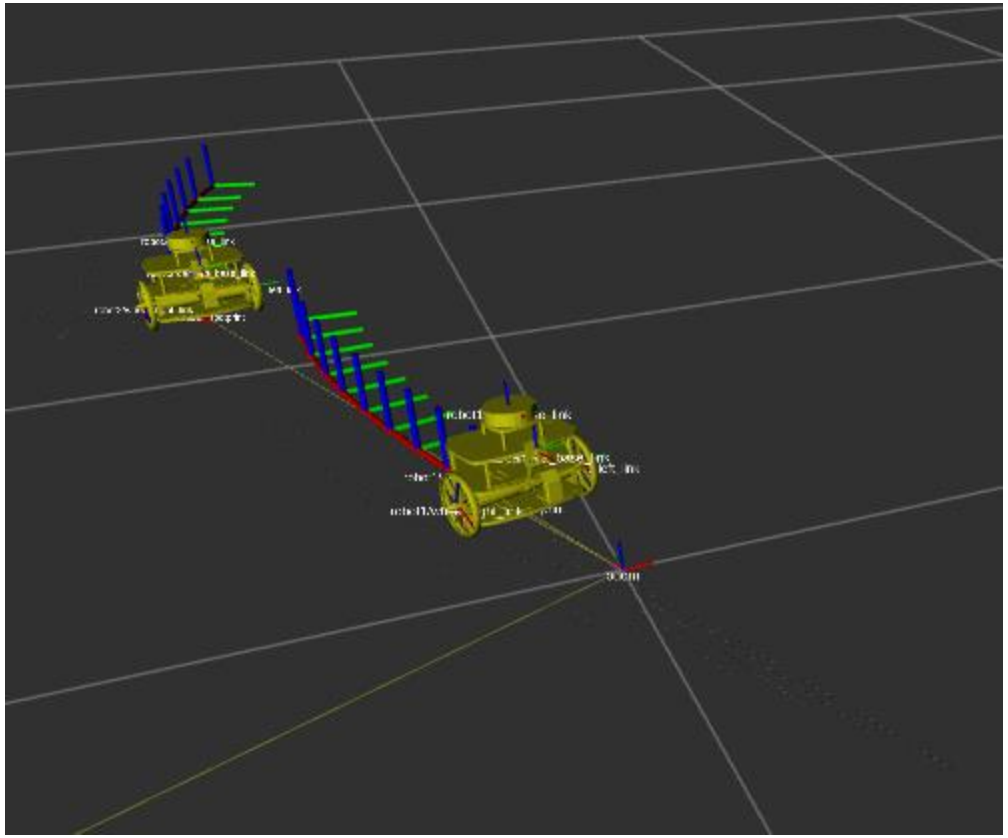

Rules

- This is challenge **not** a class. The students are encouraged to research, improve tune explain their algorithms by themselves.
- MCR2(Manchester Robotics) Reserves the right to answer a question if it is determined that the questions contains partially or totally an answer.
- The students are welcomed to ask only about the theoretical aspect of the classed.
- No remote control or any other form of human interaction with the simulator or ROS is allowed (except at the start when launching the files).
- It is **forbidden** to use any other internet libraires with the exception of standard libraires or NumPy.
- If in doubt about libraires please ask any teaching assistant.
- Improvements to the algorithms are encouraged and may be used as long as the students provide the reasons and a detailed explanation on the improvements.
- All the students must be respectful towards each other and abide by the previously defined rules.
- Manchester robotics reserves the right to provide any form of grading. Grading and grading methodology are done by the professor in charge of the unit.