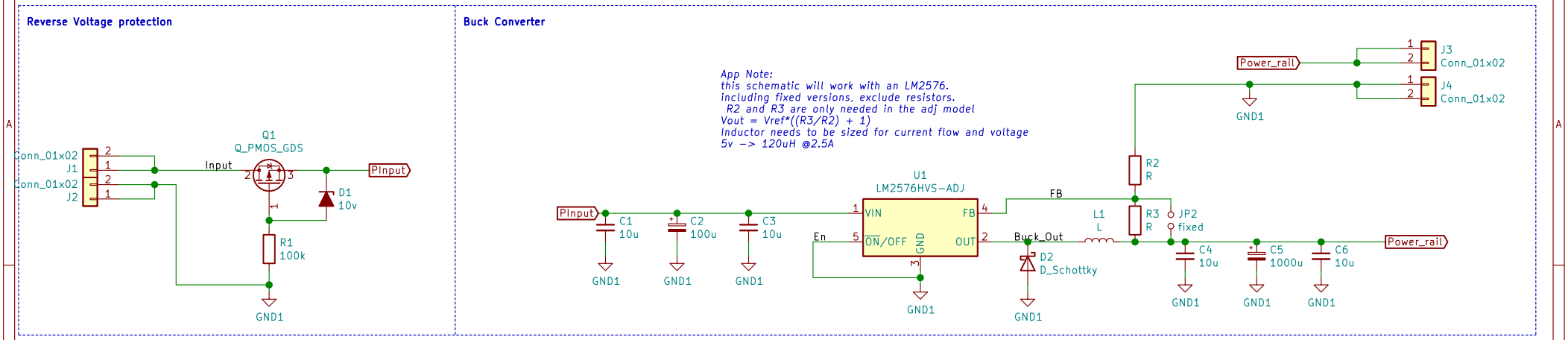

Alec R		
Sheet: /		
File: SMPS_breakout.sch		
Title: SMPS Board		
Size: A4	Date:	Rev: v1
KiCad E.D.A. kicad (5.1.10)-1		Id: 1/1