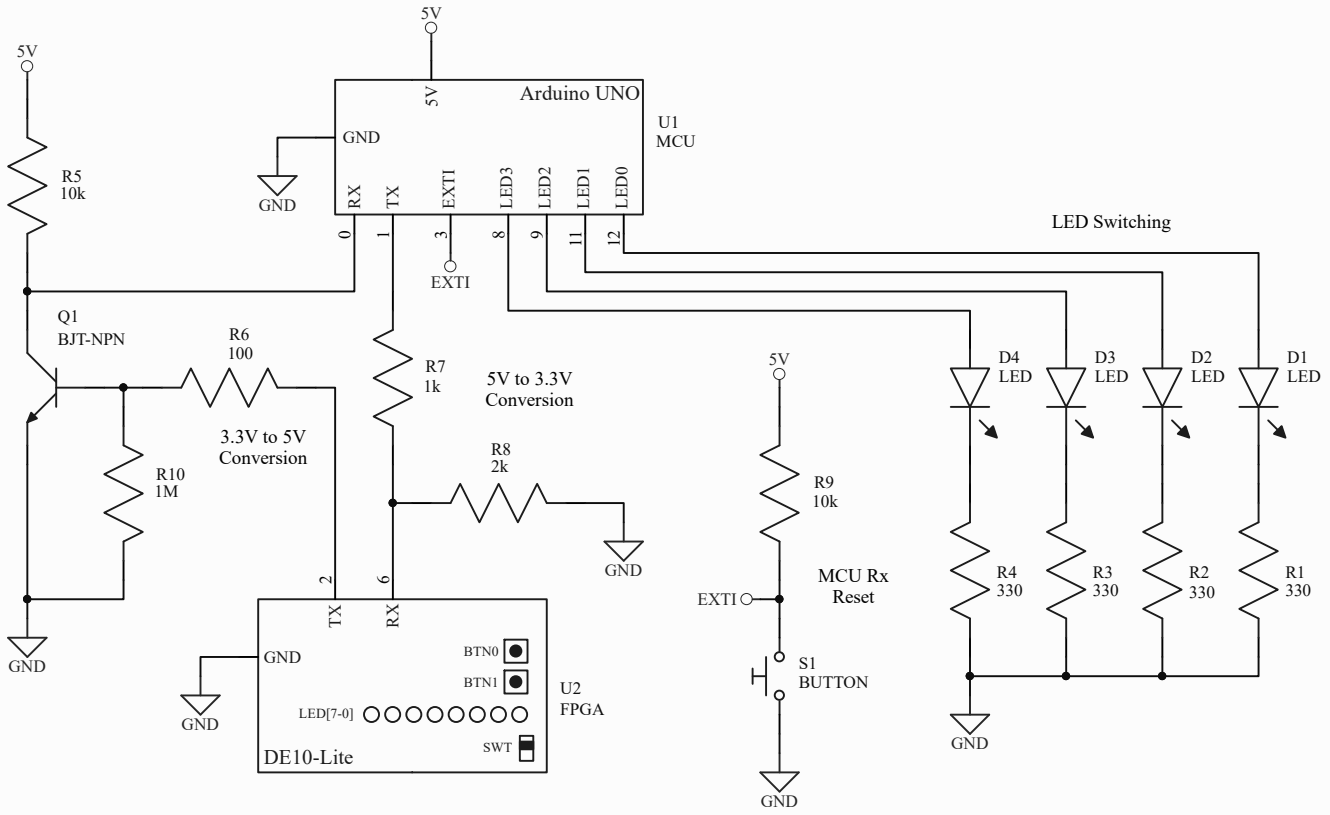

Title	FPGA-MCU UART CIRCUIT	
Size A4	Number	Revision
Date: 17/04/2020	Sheet of	
File: H:\SCIENCE\..\UART.SchDoc	Drawn By: FILIPPO VALMORI	