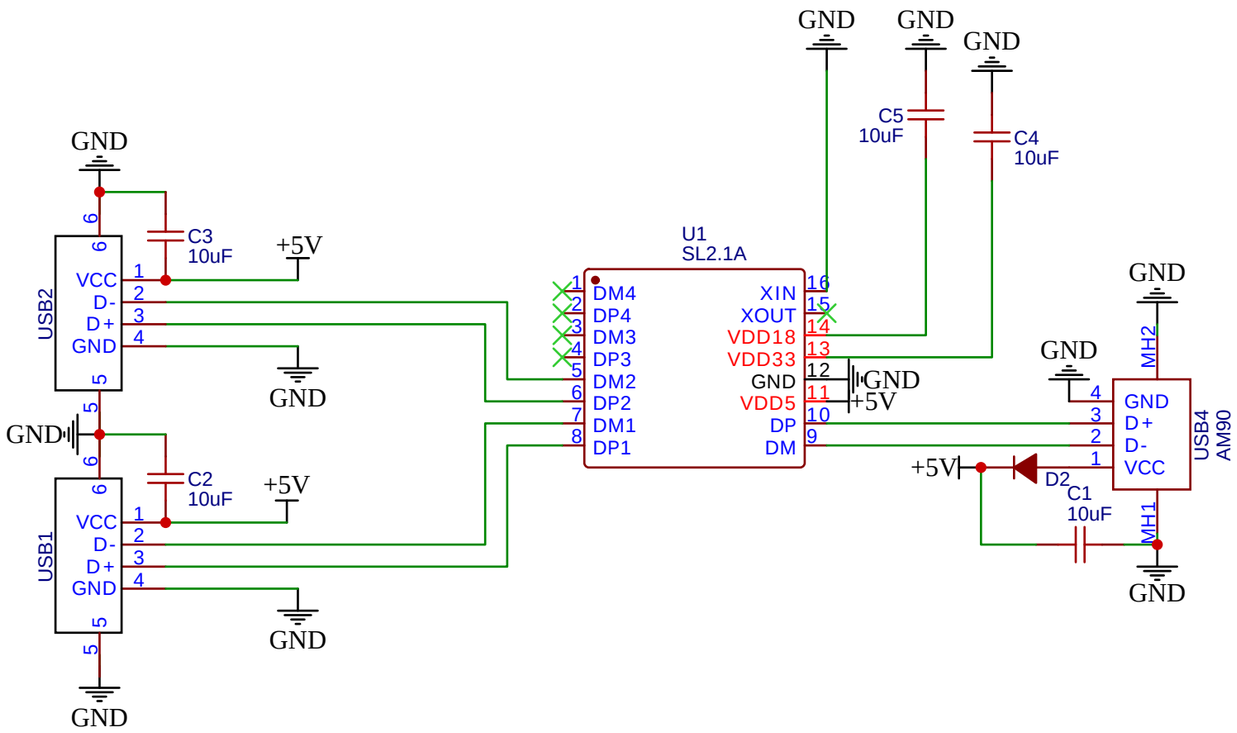

TITLE: Sheet_1		REV: 1.0
	Company: Your Company	Sheet: 1/1
	Date: 2025-01-23 Drawn By: amoya20949	