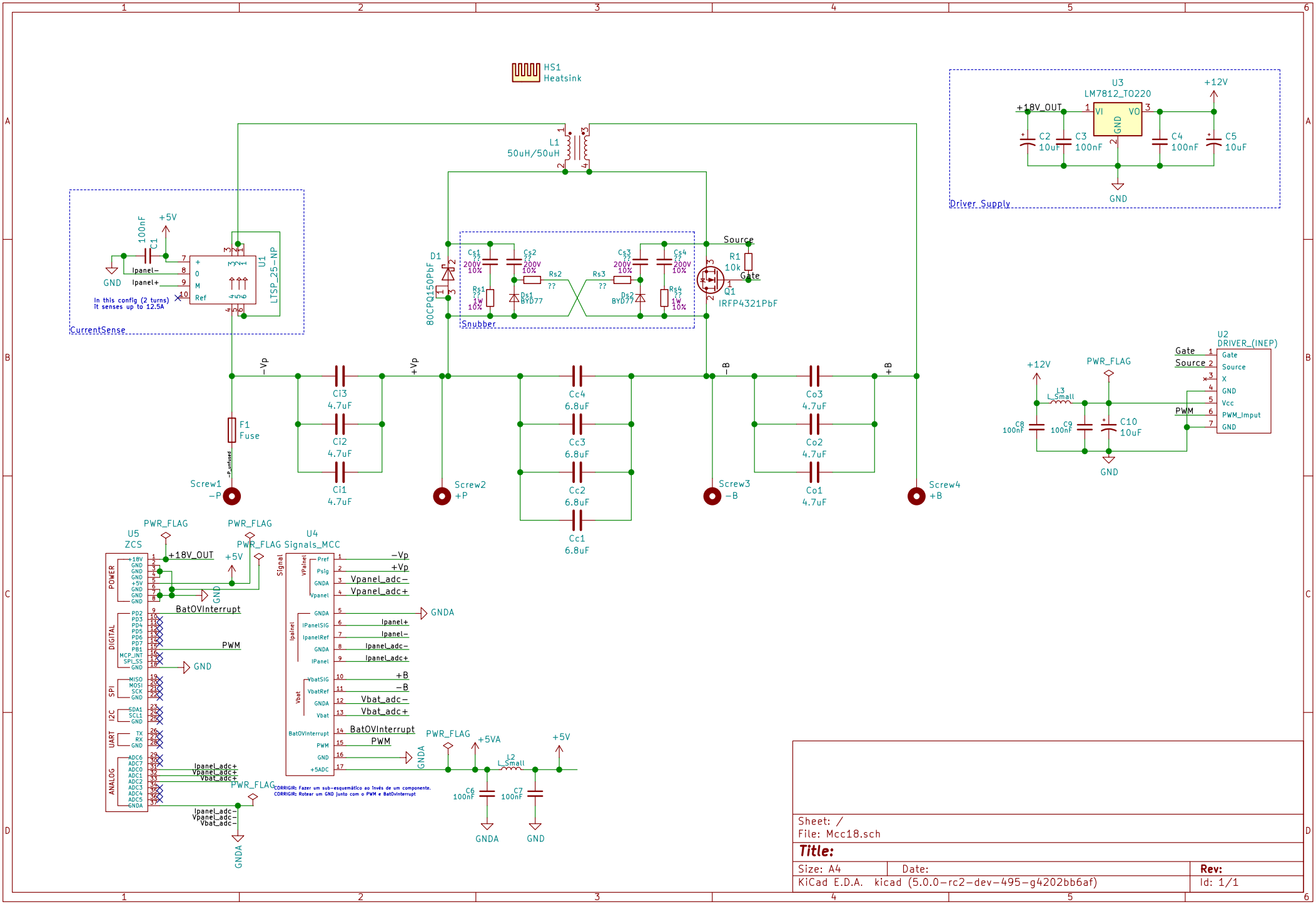

Sheet: /
File: Mcc18.sch

Title:

Size: A4	Date:	Rev:
KiCad E.D.A. kicad (5.0.0−rc2−dev−495−g4202bb6af)		Id: 1/1