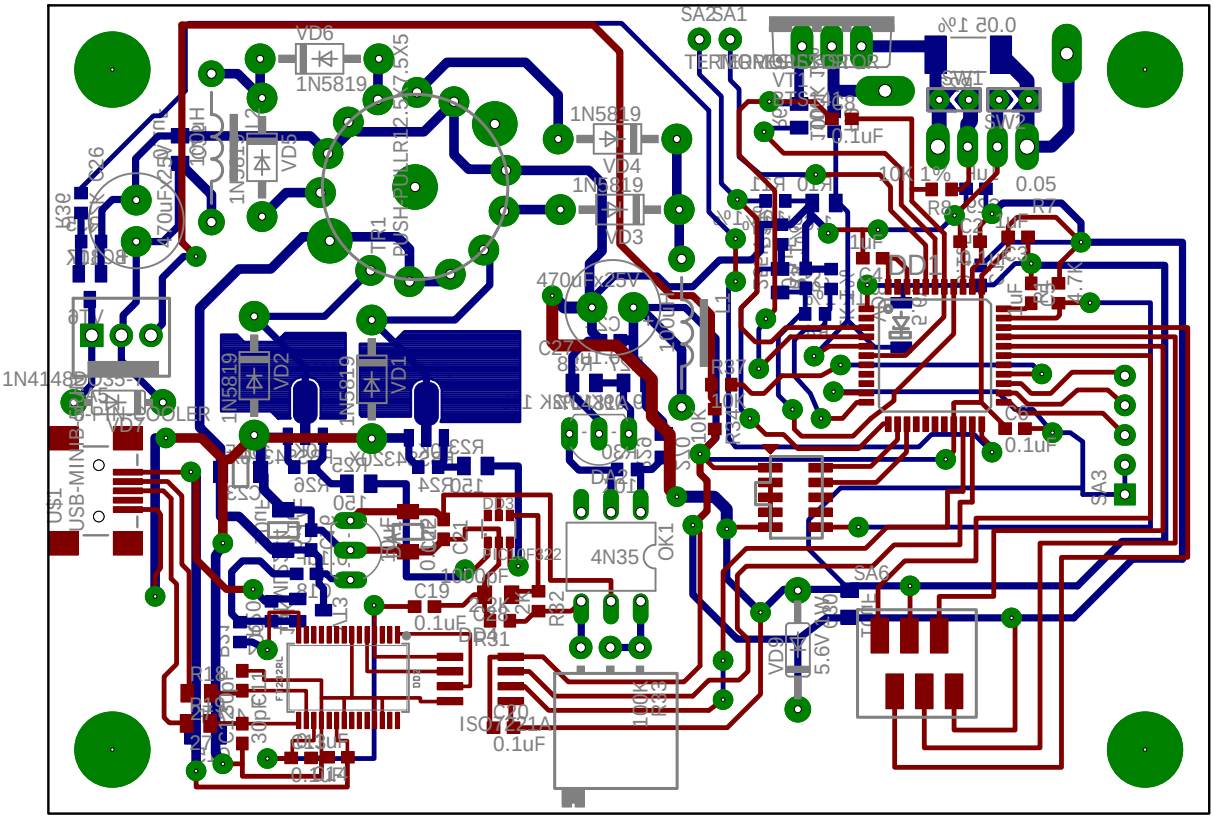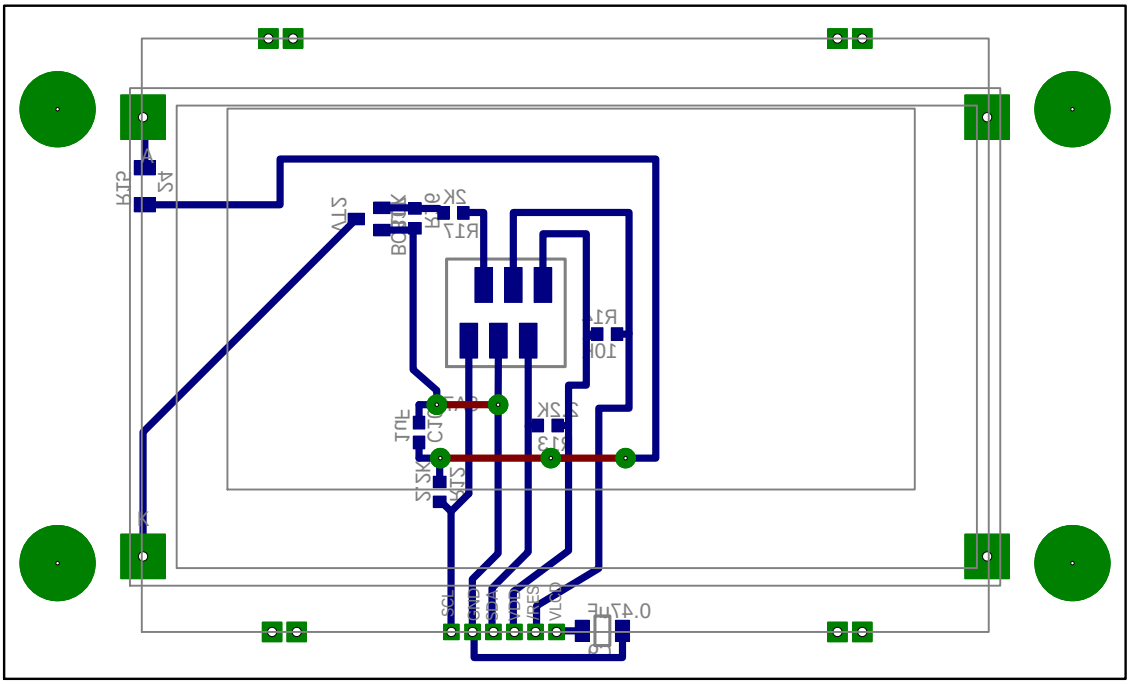
VD6
1N5819
VD5
1N5819
VD4
1N5819
VD3
1N5819
VD2
1N5819
VD1
470uFx25V
4N35
OK1
0.1uF
C19
C20
ISO7241A
DD1
SA2
SA1
SA6
VD9
5.6V
USB-MINIB
US1
1N4148
0.05
10k 1%
R7
C6
0.1uF
A3