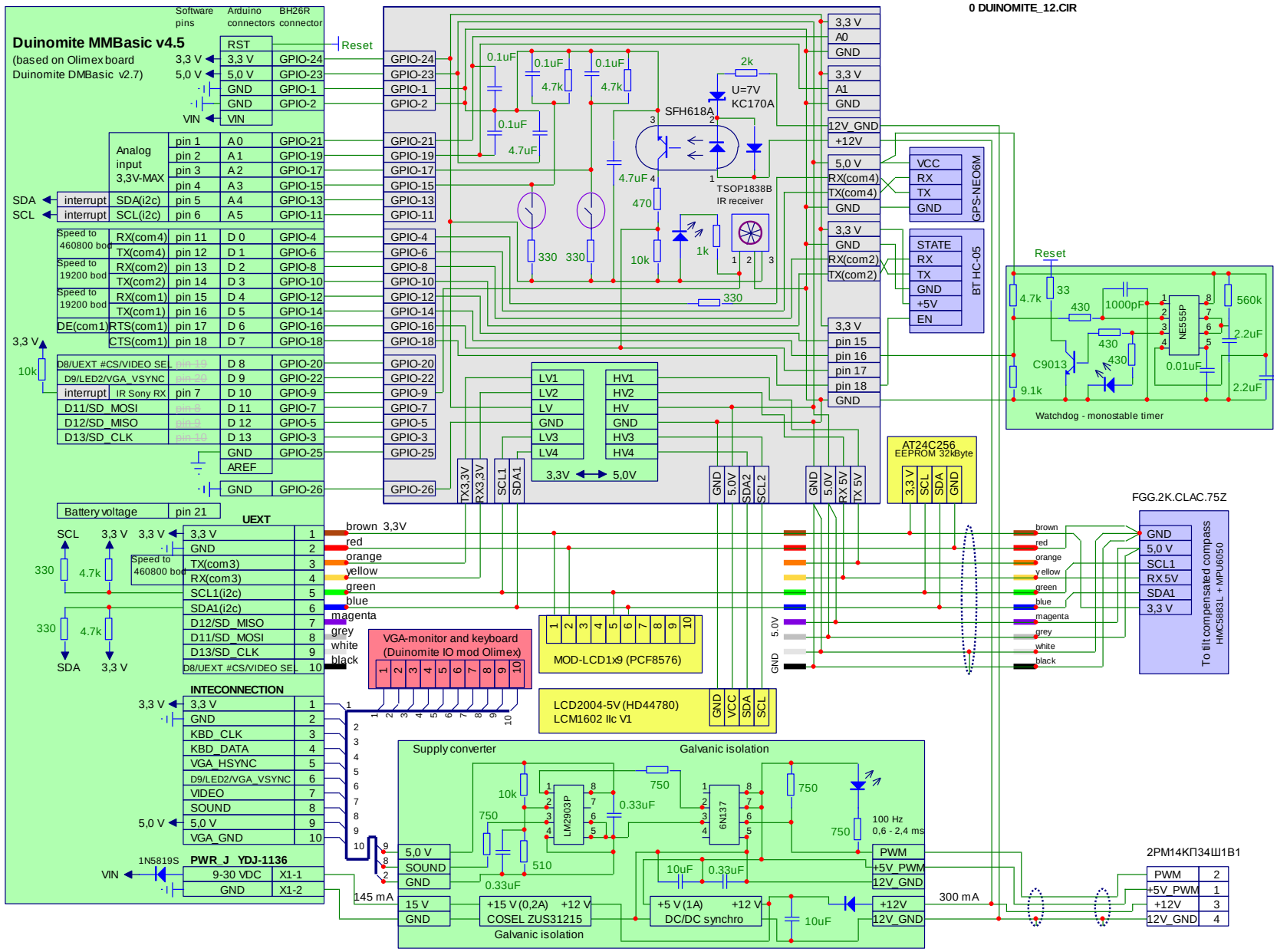
0 DUINOMITE_12.CIR
Duinomite MMBasic v4.5
(based on Olimex board
Duinomite DMBasic v2.7)
Software pins
Arduino connectors
BH26R connector
RST
3,3 V
5,0 V
GND
VIN
Reset
Analog input 3,3V-MAX
SDA
SCL
interrupt
Speed to 460800 bod
Speed to 19200 bod
RX(com4)
TX(com4)
RX(com2)
TX(com2)
RX(com1)
TX(com1)
DE(com1)
RTS(com1)
CTS(com1)
D8/UEXT #CS/VIDEO SEL
D9/LED2/VGA_VSYNC
IR Sony RX
D11/SD_MOSI
D12/SD_MISO
D13/SD_CLK
AREF
Battery voltage
pin 21
UEXT
TX(com3)
RX(com3)
SCL1(i2c)
SDA1(i2c)
D12/SD_MISO
D11/SD_MOSI
D13/SD_CLK
D8/UEXT #CS/VIDEO SEL
INTECONNECTION
KBD_CLK
KBD_DATA
VGA_HSYNC
D9/LED2/VGA_VSYNC
VIDEO
SOUND
VGA_GND
PWR_J YDJ-1136
9-30 VDC
X1-1
X1-2
1N5819S
145 mA
0.1uF
4.7k
2k
U=7V
KC170A
SFH618A
TSOP1838B
IR receiver
470
10k
1k
330
4.7uF
LV1
LV2
LV
LV3
LV4
HV1
HV2
HV
HV3
HV4
3,3V
5,0V
TX3,3V
RX3,3V
SCL1
SDA1
SDA2
SCL2
RX 5V
TX 5V
VCC
STATE
EN
GPS-NEO6M
BT HC-05
AT24C256
EEPROM 32kByte
Watchdog - monostable timer
NE555P
C9013
33
430
1000pF
560k
2.2uF
0.01uF
9.1k
FGG.2K.CLAC.75Z
To tilt compensated compass
HMC5883L + MPU6050
brown
red
orange
yellow
green
blue
magenta
grey
white
black
VGA-monitor and keyboard
(Duinomite IO mod Olimex)
MOD-LCD1x9 (PCF8576)
LCD2004-5V (HD44780)
LCM1602 IIc V1
Supply converter
Galvanic isolation
LM2903P
6N137
750
0.33uF
510
100 Hz
0,6 - 2,4 ms
PWM
+5V_PWM
12V_GND
+15 V (0,2A)
+12 V
COSEL ZUS31215
+5 V (1A)
DC/DC synchro
300 mA
2PM14КП34Ш1В1