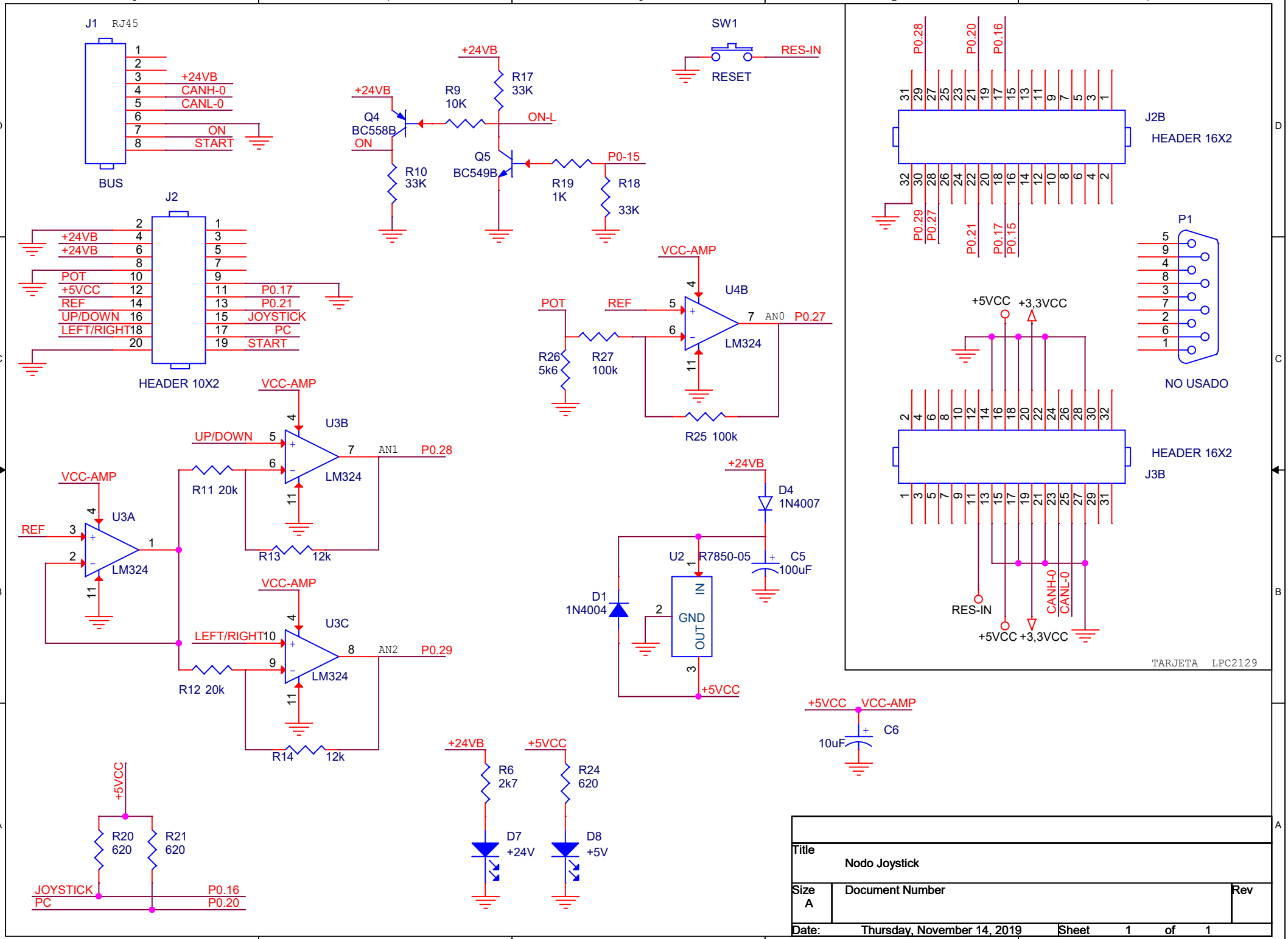

Title	Nodo Joystick	
Size A	Document Number	Rev
Date: Thursday, November 14, 2019	Sheet 1 of 1	