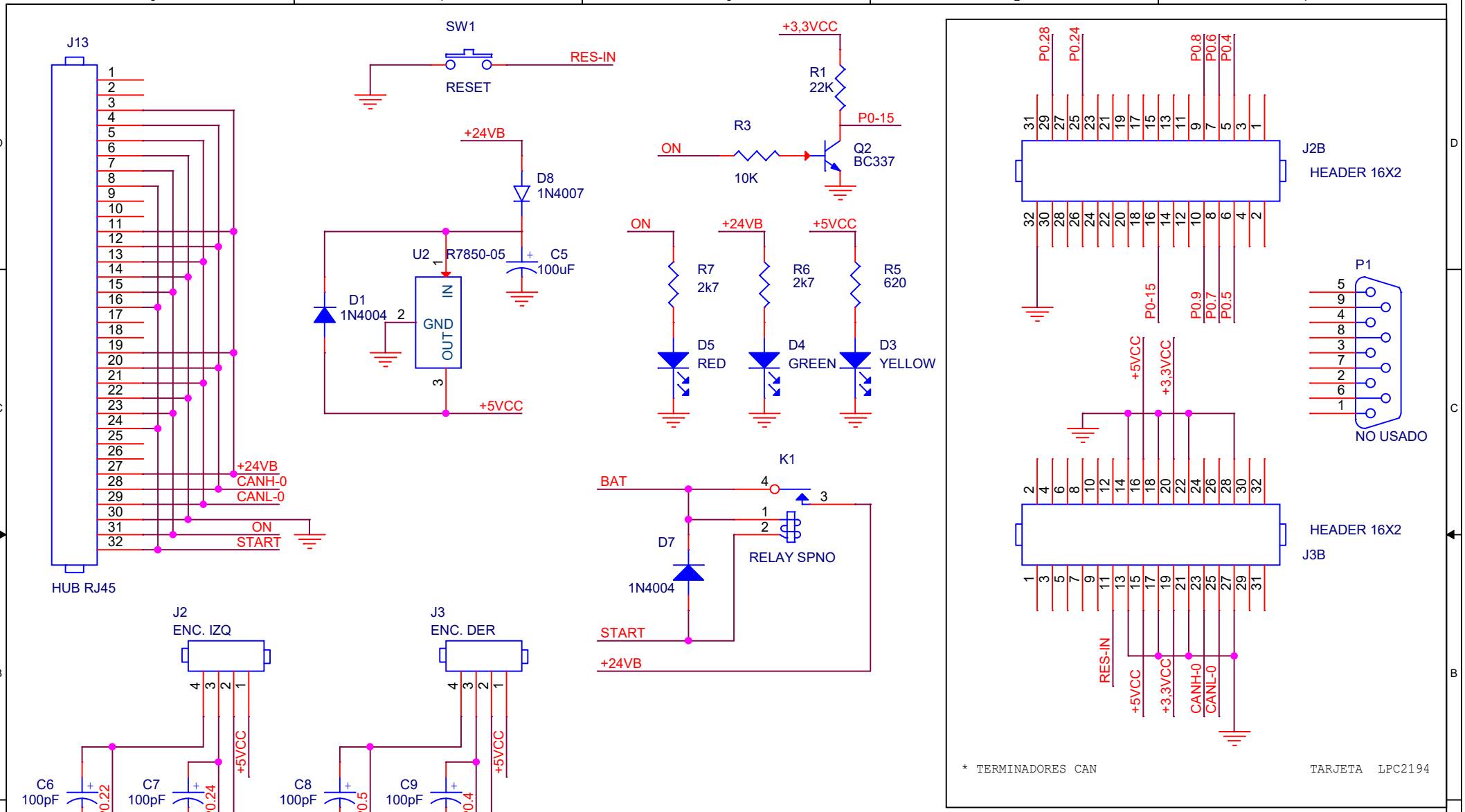


| | | |
|---|---|---|
| Title | Nodo Potencia | |
| Size A | Document Number | Rev |
| Date: Wednesday, December 11, 2019 | Sheet 1 of 1 | |