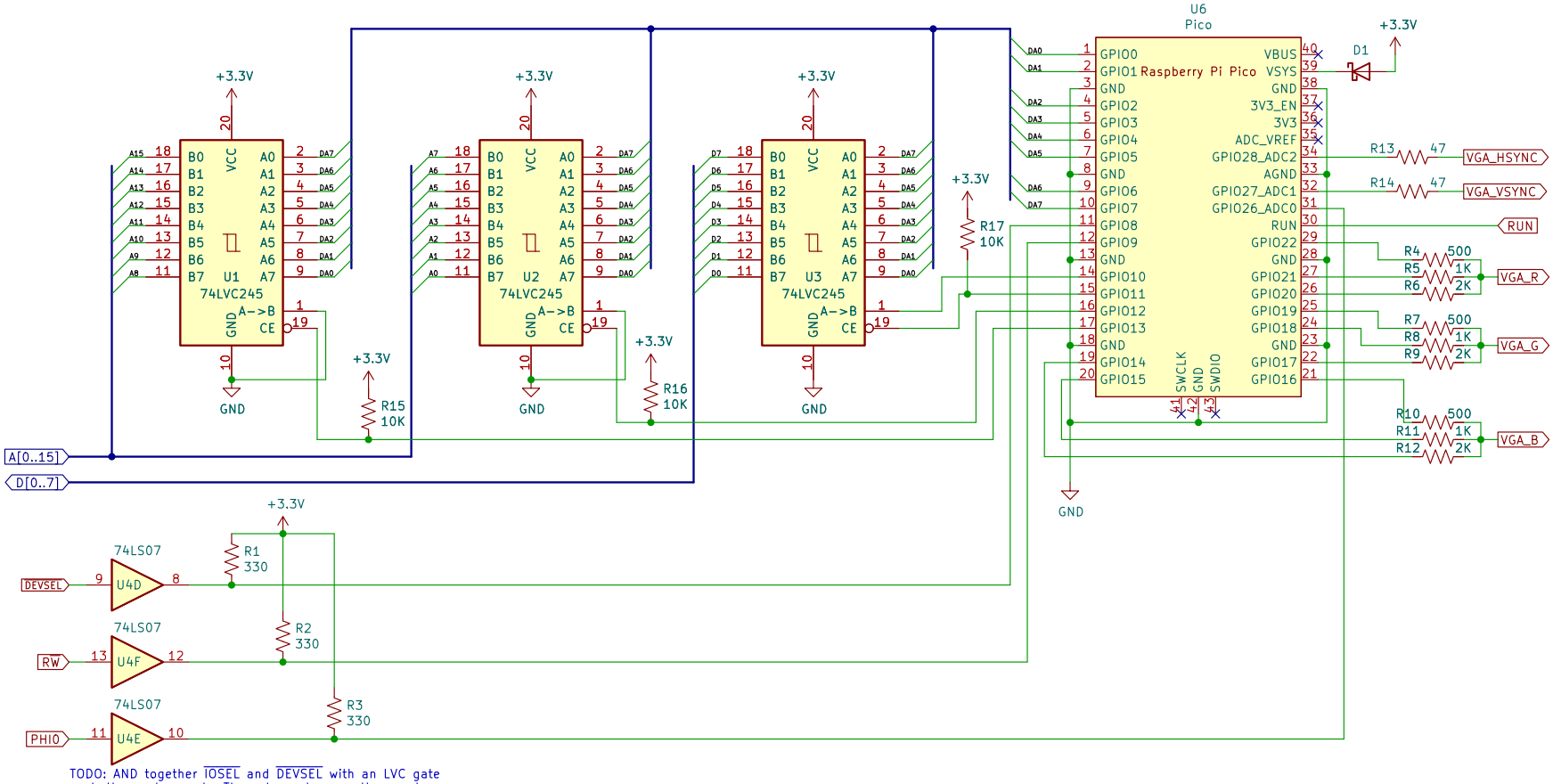


TODO: AND together $\overline{\text{IOSEL}}$ and $\overline{\text{DEVSEL}}$ with an LVC gate so both can be used. The extra gates can then replace these inefficient OC buffers.

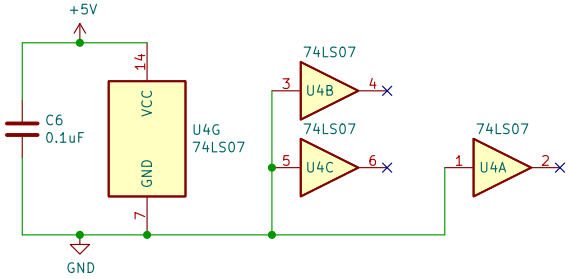


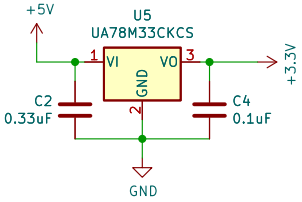


Copyright (c) 2021-2022 Mark Aikens
Licensed under CERN-OHL-P V2.0 (https://ohwr.org/cern_ohl_p_v2.txt)

Sheet: /
File: AppleVGA.kicad_sch

**Title: Apple II VGA Card**

| | | |
|---|---|---|
| Size: A4 | Date: 2021-12-13 | Rev: A |
| KiCad E.D.A. kicad (6.0.7) | | Id: 1/2 |