CPE 301: Embedded Systems Design – Final Project

Alexander Larsen

May 11th, 2026

1 Introduction and Project Motivation

1.1 Problem

As part of my research through the Smart Robotics Lab, I am creating a wearable robotic glove that is meant to assist those with dexterity impairments. As of now, the glove can only be operated in an open-loop fashion in which there is zero user input. While this glove is primarily meant to assist those with heavily impaired dexterity, there is still a need for a mode that allows the user to control their hand independently. The proposed embedded system would create a "Manual" mode in addition to the "Automatic" mode for this particular device. This means that the user could slightly bend or extend their fingers in which the system would recognize this motion and assist the user accordingly.

1.2 Audience

The primary audience for this system would be individuals with conditions that impair their dexterity such as partial paralysis (little movement) or tremors (involuntary movement), but can weakly move their hands if need be. Individuals with such conditions can often move and grip with their hands but with severely weakened strength. This device in tandem with the proposed system would allow the user to comfortably use their hands for daily activities.

1.3 Why an Embedded System?

An embedded system is necessary for this type of application because I need to able to take some form of input - in this case, it's the user's finger movement - and interpret it so that I could provide the desired response from the device.

2 Proposed System Overview

2.1 Main Features

The wearable robotic glove associated with this system utilizes motors that twist two strings to facilitate actuation. This means that the embedded system will need to control and monitor the actuation of these motors based off of the user's physical input.

2.2 User Interaction

This device will have two particular modes - Automatic and Manual. This allows the user to control the device by using either analog buttons on the device or through the force in their hand. In Automatic Mode, the user can press a singular button to fully curl/extend their entire hand. In Manual Mode, the user will have control over each finger through small curling/extending motions of their hand while wearing the device. Manual Mode senses when the user slightly curls or extends their hand which then translates into actuation of that particular finger.

2.3 System Inputs

After the user has supplied the system with a small force while in Manual Mode, the system will recognize this behavior through a significant change in current. Determining which motor that caused this change in current will then facilitate which direction to actuate the glove. Automatic Mode simply relies on the singular button input to actuate the glove. (ALSO NEEDS TO BE ALTERED)

2.4 System Block Diagram

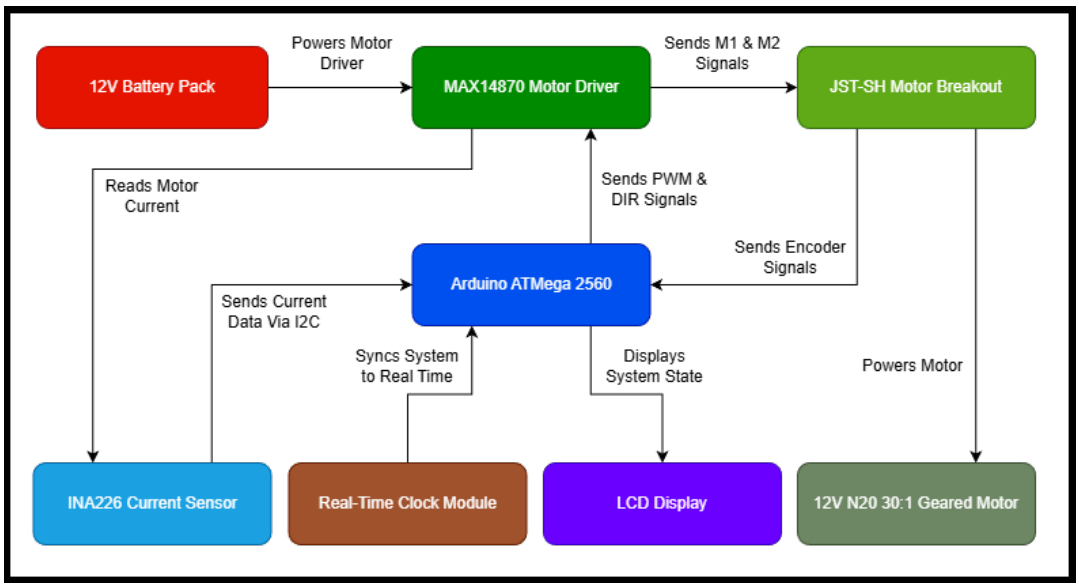

Figure 1: Block Diagram for Exoskeleton Device

2.5 System Schematics

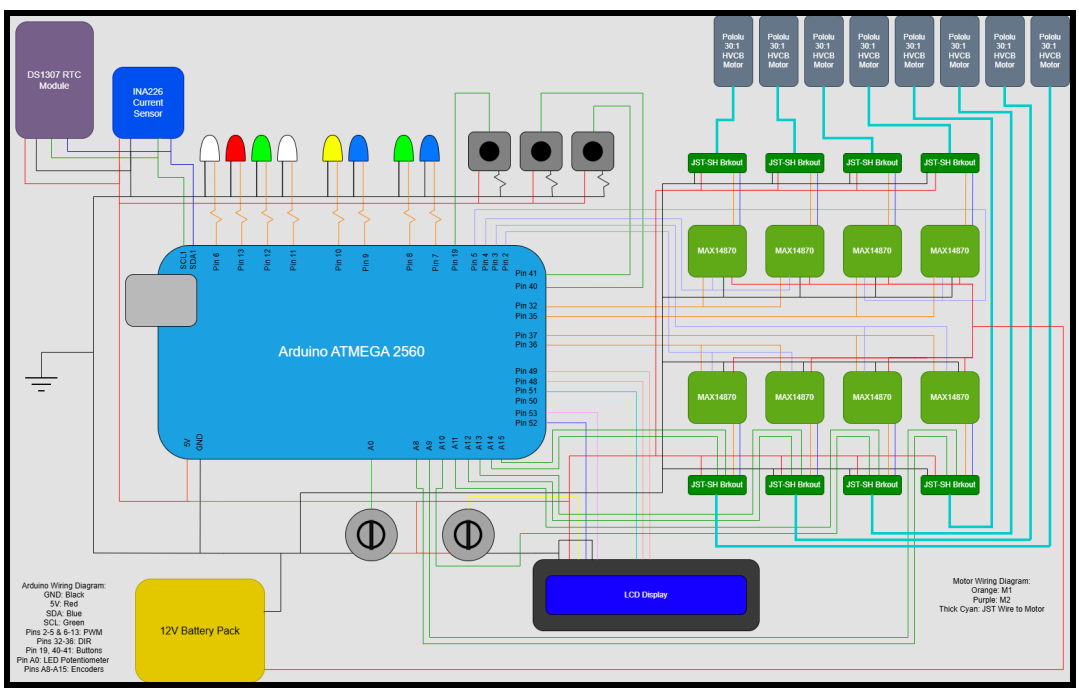

Figure 2: Schematic for Exoskeleton Device

3 High-Level Expected System Behavior

3.1 State: ON

While the system is ON, the current sensors will always monitor the current levels that are going through each motor driver. This allows the system to monitor each motor independently which is imperative to the safety of the system. While monitoring current, the system will also control the rotation of each motor via a motor driver. Each motor has their own encoder that tells the system how far it has spun in a given direction. By using these encoders, the system can determine when the actuators are moving (transitioning from IDLE to ACTUATE) as well as where it is relative to its original position which is necessary for the reset function. It's important to note that during actual use, both motors will be spun until they're completely stalled, thus keeping the finger of the glove actuated in one specific position. Simultaneously while in Manual mode, the system will store the previous encoder value and compare it to the new encoder reading to see if the actuator has moved. If this comparison is anything other than zero, the system concludes that an external force was applied. Lastly, the system will determine which direction the user was attempting to go and assist them accordingly. If the system is in Automatic mode, the device will be controlled via Serial commands.

3.2 State: OFF

If the system is turned off, then no current monitoring or motor actuation will occur. This means that no user input could ever be detected nor could any response by the system occur. Due to the design of the glove, the fingers cannot actuate in any direction without untwisting the motors which effectively stiffens the entire hand when in the OFF state.

3.3 State: ERROR

The system must account for any sensor malfunctions since the sensor's data is what primarily controls the device. This state will only occur if any of the INA226 current sensors have failed initialization or randomly malfunctioned during operation. This state will also force the system into a safe mode in which all motors will be turned off.

3.4 State: IDLE

This is the intermediate state in which the system will primarily reside. This is simply the state in which the system is waiting for an input but still monitoring data as per usual. Once the system has been powered on and the current sensors have passed initialization, this state will automatically occur. There are two sub-states - AUTO and MANUAL - within the IDLE state that determine how the device is going to be operated. These states are controlled with an analog switch (the default sub-state is set to AUTO), however, once the operating mode has been determined, the device will remain in IDLE.

3.5 State: AUTO

This is one of the sub-states of IDLE in which the device will only transition to the ACTUATE state via a button command. While this sub-state is active, the device cannot actuate via the user's hand motions since that is reserved for the MANUAL state.

3.6 State: MANUAL

This is the other sub-state of IDLE which allows the device to actuate through the user's motions while wearing the glove (curling/extending their finger inside of the glove) rather than relying on the button command.

3.7 State: ACTUATE

Actuating the hand is a specific action warranted by the system which is why it needs its own state. Once the system receives a command to curl or extend the exoskeleton, the device enters the

ACTUATE state indicating that the device is currently moving.

3.8 State: ZERO/RESET

Similarly to the ACTUATE state, this state is when the device is in the process of resetting itself back to its starting position. This effectively zeroes the device and sets its state back to IDLE.

3.9 Environmental Responses

Ideally, the system shouldn't respond differently to changes in the environment since the only form of input is an external force or button press applied by the user. However, if a strong enough force that wasn't from the user were to be applied, this would effectively result in a similar response which could pose functionality issues. Another environmental change would be if something foreign were to adjust the placement of any separate components such as resistors or capacitors. Depending on how drastic of the misplacement, the entire system could be compromised.

3.10 Module Design

To simplify the creation of this embedded system, it's best to build the system with modularity. This system will have 4 distinct modules - a motor module, a logic module, a display module, and a power safety module. The motor module will house everything related to actuator control i.e. all motor drivers and motor breakouts which allow for the precise control over the power and state of the motors at a given time. The MAX14870 motor drivers will control the direction and power of the motors while the JST-SH motor breakouts will facilitate encoder control which tells the computer how much the shaft has rotated compared to a reference point.

Speaking of computers - the logic module will contain the Arduino ATMega 2560 microcontroller as well as the five INA226 current sensors. Since the current sensors need direct communication with the ATMega 2560 via the I2C Serial protocol, it's best to have the SDA and SCL pins of each isolated together. The INA226 current sensors will also be powered using the Arduino's 5V pin. This logic module is the central hub/brain of the system which means everything will relay back to this module in some capacity. The MAX14870 motor driver has a PWM and DIR pin that control the amount of power going to the motor as well as which direction to spin the shaft which will be controlled through various GPIO pins on the ATMega 2560.

This device also needs a display module that shows the current state of the device, so that the user has better knowledge of their device while in operation. This module will contain the LCD display and Real-Time Clock module so that we can monitor the device accurately. This module must be connected to the logic module in order to correctly receive any display commands. Depending on how much data that can be transmitted to the display, it could also show if any external force has been applied and notify the user accordingly.

Lastly, this device needs a power safety module. Since these 12V motors are being powered by an external power source, we could easily damage our other components if not careful. This power safety module will contain both the external power supply and any extra electrical components meant to prolong the system's overall integrity and thus longevity. This module will also contain any analog controls/switches that power up/shut down the system entirely. This module will not interact directly with the logic module, excluding the ground connections, since the logic side of this system is quite sensitive and can be easily damaged by excess power.

3.11 Control Logic - State Diagram

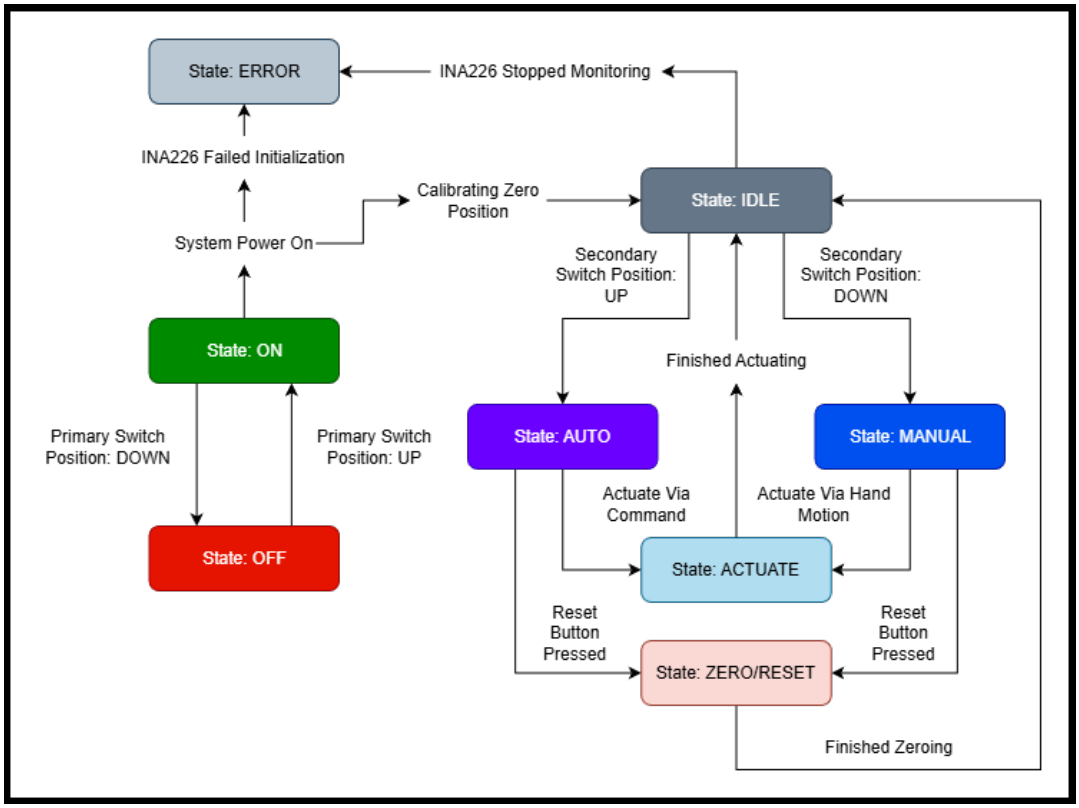

Figure 3: State Diagram for Exoskeleton Device

4 Environmental and Energy Impact

4.1 Energy Efficiency

A previous concept for this wearable robotic glove involved force-sensitive resistors to detect when an external force was applied, however, opting for this current sensing method simplifies the design by allowing the glove to use it's own current levels to detect outside forces. This reduces potential waste of dysfunctional force-sensitive resistors due to their weak nature. This also minimizes the energy consumption of the device by simply monitoring the current of the motor drivers instead of diverting voltage to the force-sensitive resistors.

4.2 Design Safety

This system will be dealing with high levels of current, especially when at full operating voltage of the motors. To safely monitor the current as well as anticipate high current spikes while stalling the motors, strong capacitors and resistors will be added to dampen the load on the motor drivers and smoothen the current readings.

4.3 Affordability

The various motors, motor drivers, and current sensing modules used within this system are highly accessible and do not sacrifice their quality despite costing cheaper. The entirety of this embedded system alone shouldn't cost more than 100-150 USD.

4.4 Sustainability

The glove itself is made using an internal cotton-glove liner and an external PLA exoskeleton which is entirely organic/biodegradable under certain recycling conditions. The glove itself is also easy to assemble and repair due to its minimalist design. The embedded system that controls the glove utilizes commercially reliable components that are easily replaceable if need be and will be constructed with long-term maintenance in mind.

4.5 Accessibility

This system provides two modes of operation thus giving users more versatility with the device. By allowing for an automatic and manual mode of actuation, this device can be used by a wide variety of individuals regardless of the condition of their hand. The automatic mode simply relies on a single button to actuate/de-actuate the glove while the manual mode uses the user's ability to slightly curl or extend their fingers while wearing the device which are both fairly straightforward. Lastly, the device will have an LCD Display synced with an RTC module so that the user can monitor the device easily and without much prior knowledge.

5 Assumptions and Constraints

5.1 Time

The primary constraint with this proposed system is the time that is required to develop it adequately. I'm currently developing it, however, I have added a bit of a time crunch since I've moved this deadline to be within this semester. I also must account for any additional time that may be used if I mistakenly break a component within the system. I do believe I can achieve this within the semester, however, this project has many factors involved and could be incredibly difficult if I don't manage my time accordingly.

5.2 Limited Device Capability

The Arduino ATMega 2560 has a limited amount of usable pins for my given setup which means I won't be able to construct a wearable robotic glove with full finger dexterity using this particular microcontroller. However, this could be beneficial in the long-run as I'll have less sensors to configure which could save me some time. I still believe I can achieve a complex system, however, it won't show the full capability of my device.

5.3 Demonstration Constraints

This project includes a video demonstration of the embedded system in which external aspects could cause irregularities that don't correlate with the system itself. To properly demonstrate the system, the motors will operate without the glove strung up. This is to eliminate any issues such as string friction, video obstruction, etc.