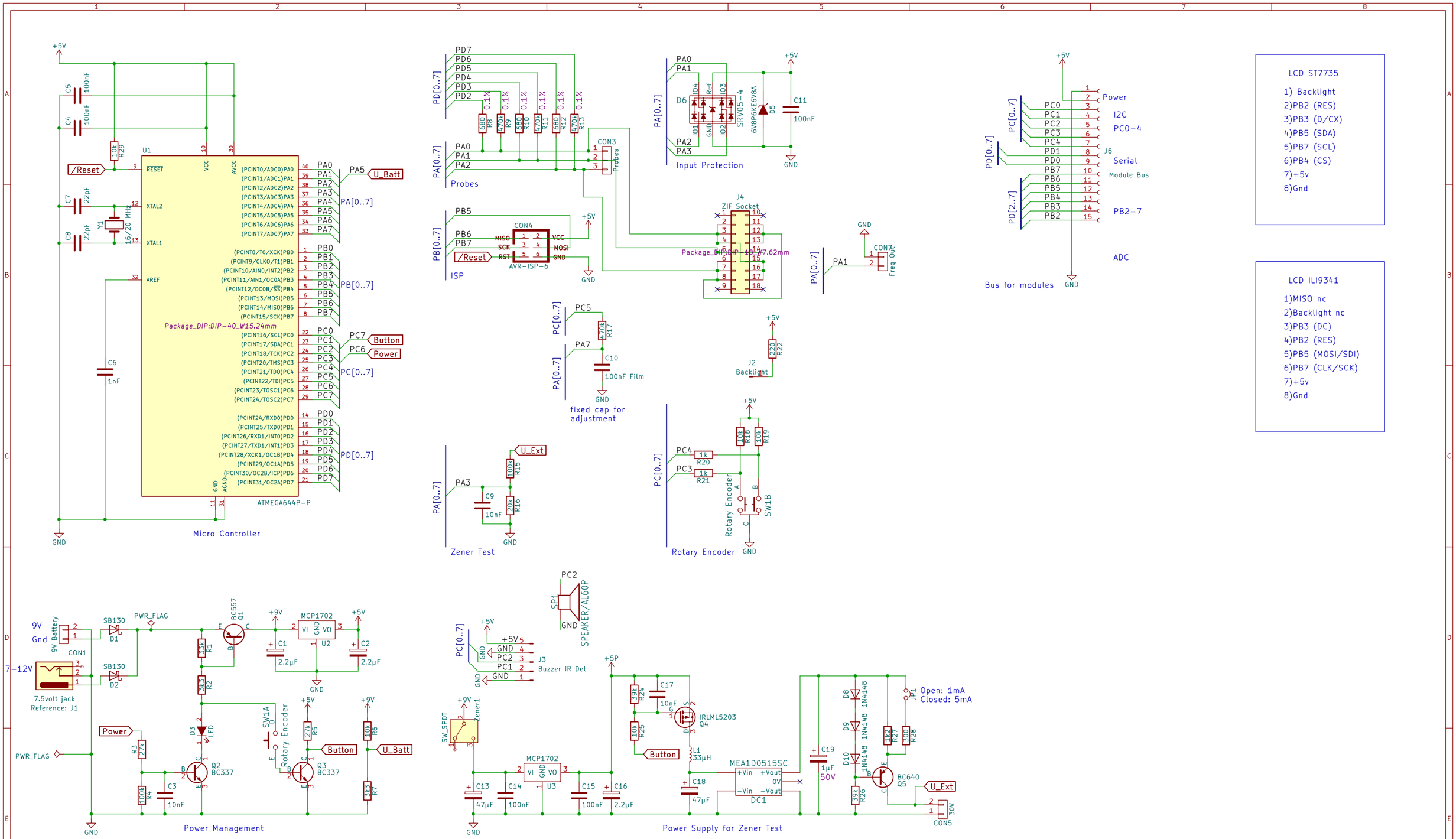

Development Board based on ATmega644/1284

Markus Reschke

Sheet: /
File: TesterPlus.kicad_sch

Title: Component Tester Dev Kit 644

Size: A3	Date:	Rev:
KiCad E.D.A. 9.0.4		Id: 1/1