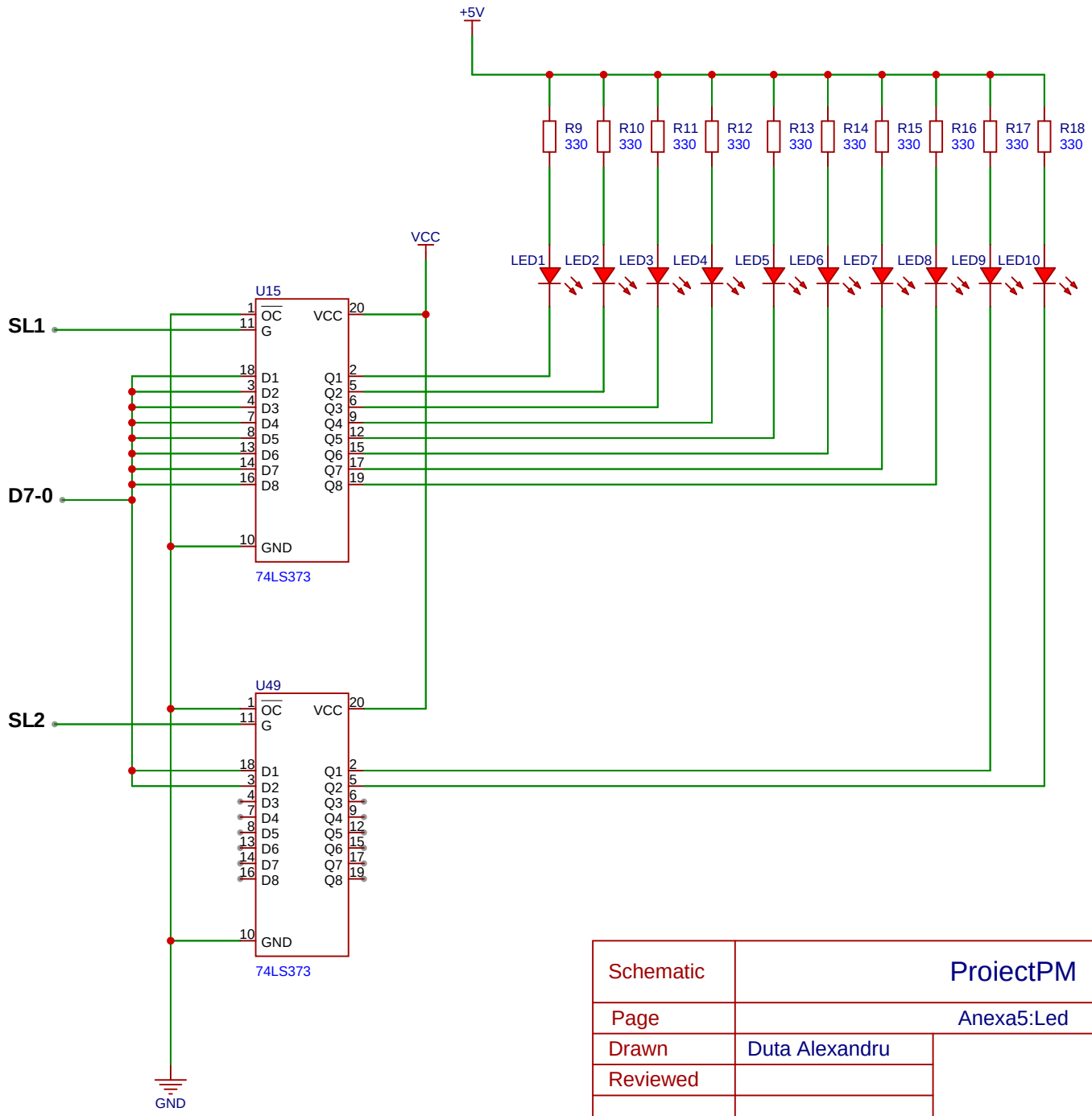

Schematic	ProiectPM	Update Date	2025-01-07
		Create Date	2024-12-15
Page	Anexa5:Led	Part Number	
Drawn	Duta Alexandru	Proiect_PM	
Reviewed			
		VER	SIZE	PAGE 5 OF 8
EasyEDA		V1.0	A4	EasyEDA.com