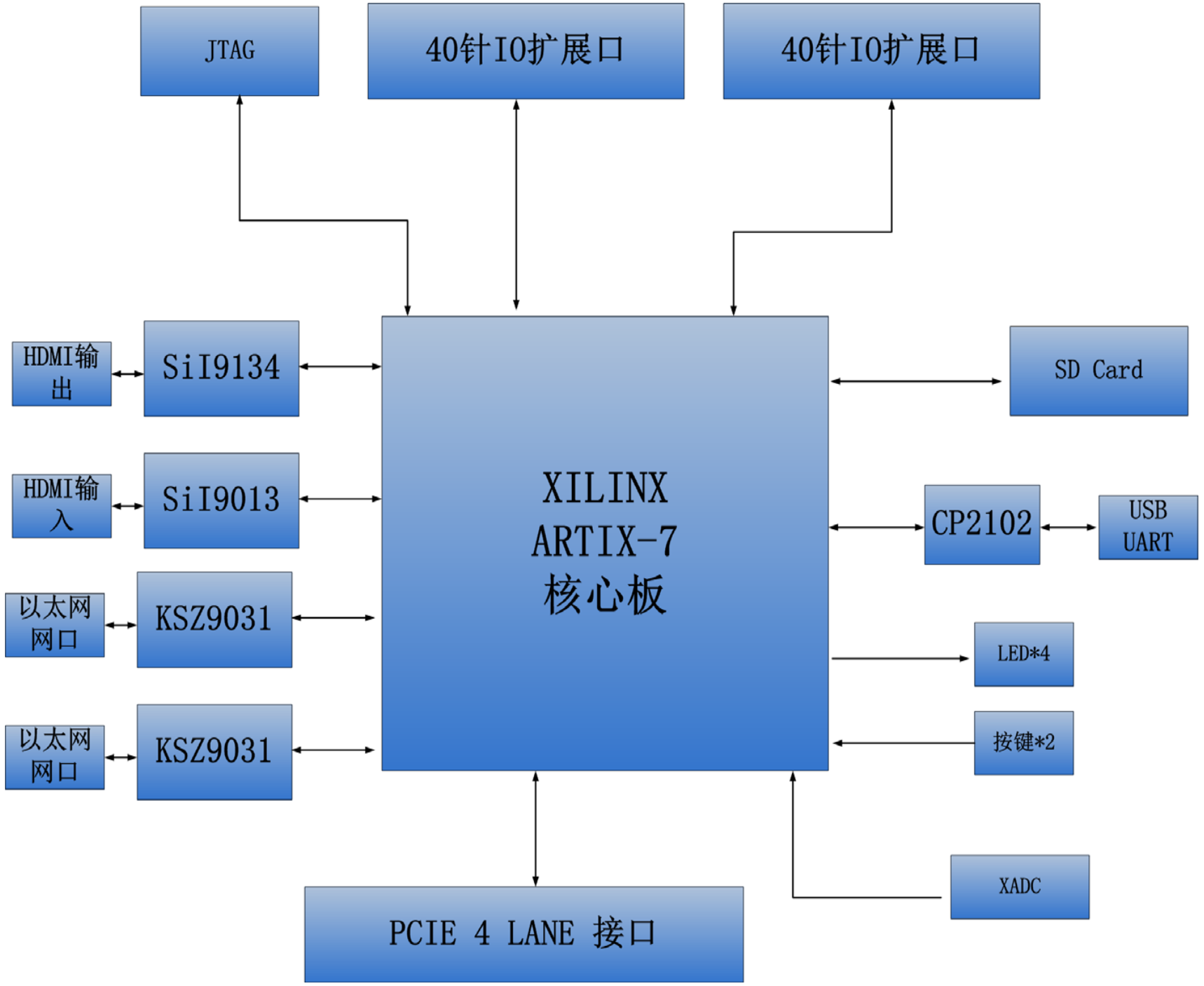

ALINX

Title: PAGE01 BLOCK DIAGRAM

Size | Document Number: AX7103扩展板 Schematics | Rev: 1.0

Date: Friday, February 02, 2018 | Sheet 1 of 11

ALINX Confidential

These IOs are on BANK34, Voltage is 1.5V!!!

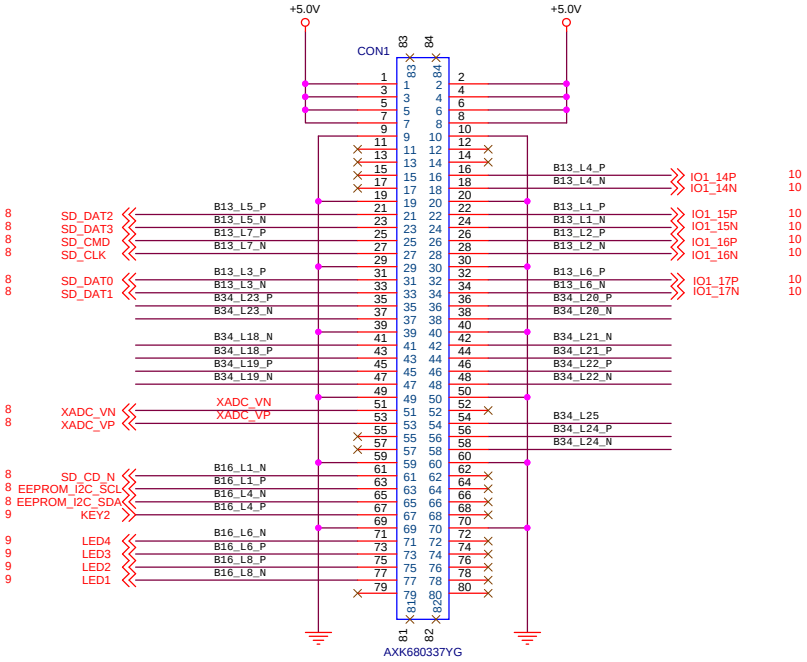

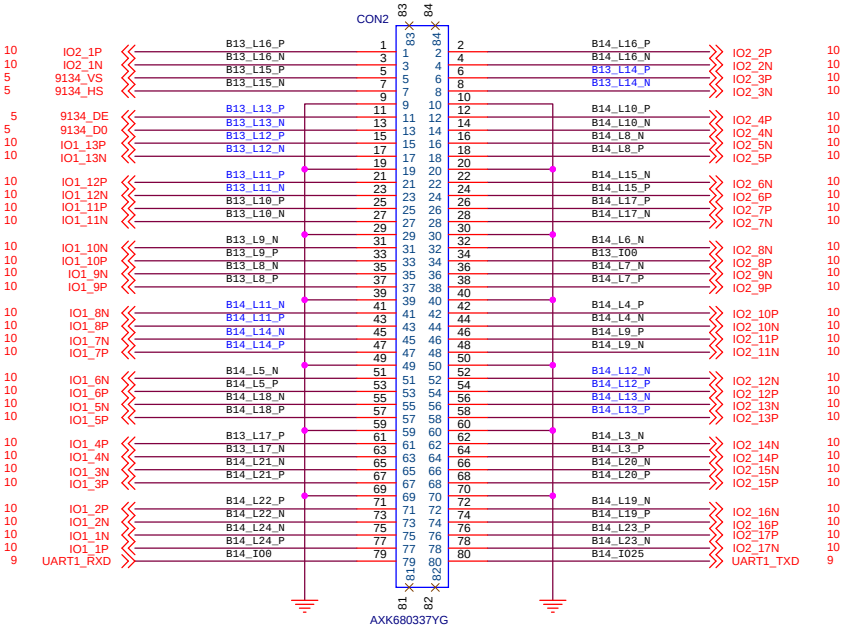

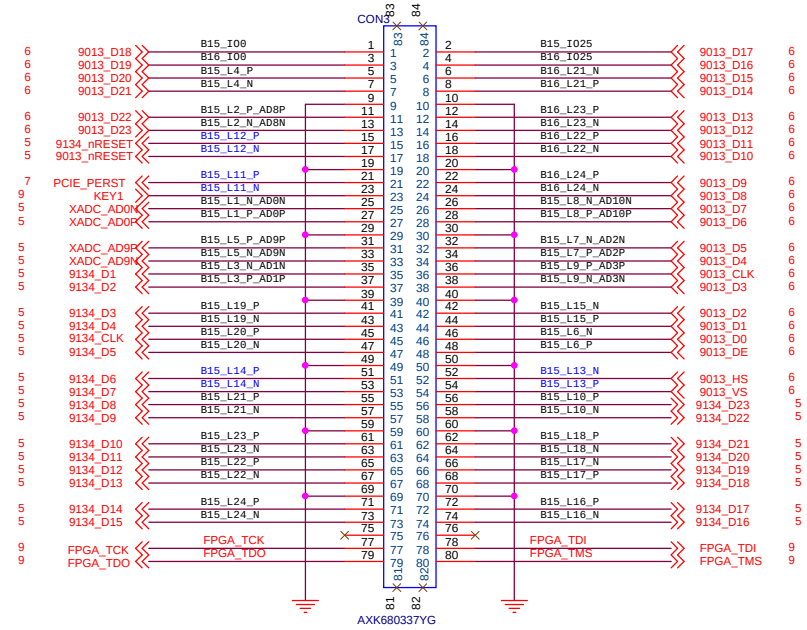

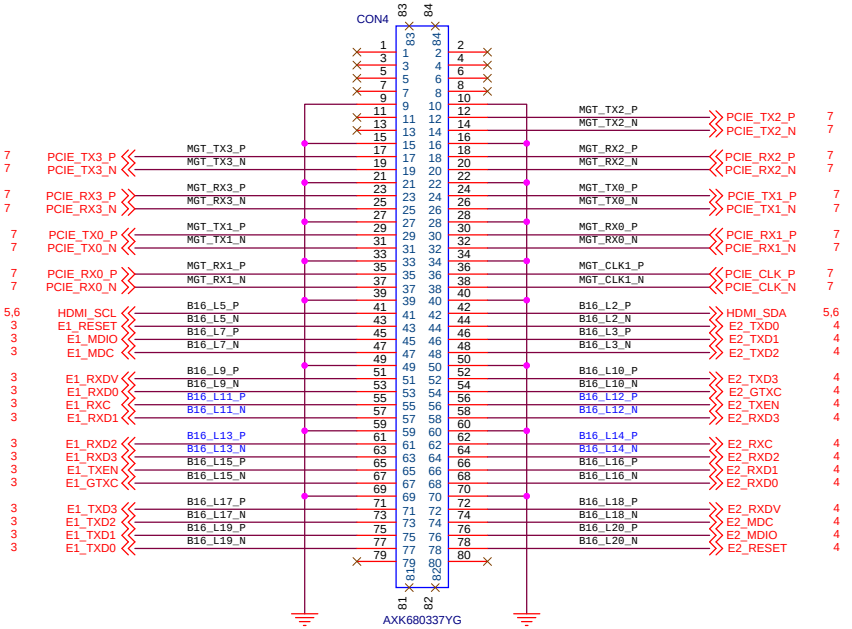

ALINX Http://www.heijin.org

Title	PAGE02 Board Connector
Size: Custom	Document Number: AX7103扩展板 Schematics
Rev	1.0
Date:	Tuesday, June 07, 2022
Sheet	2 of 11

ALINX Confidential

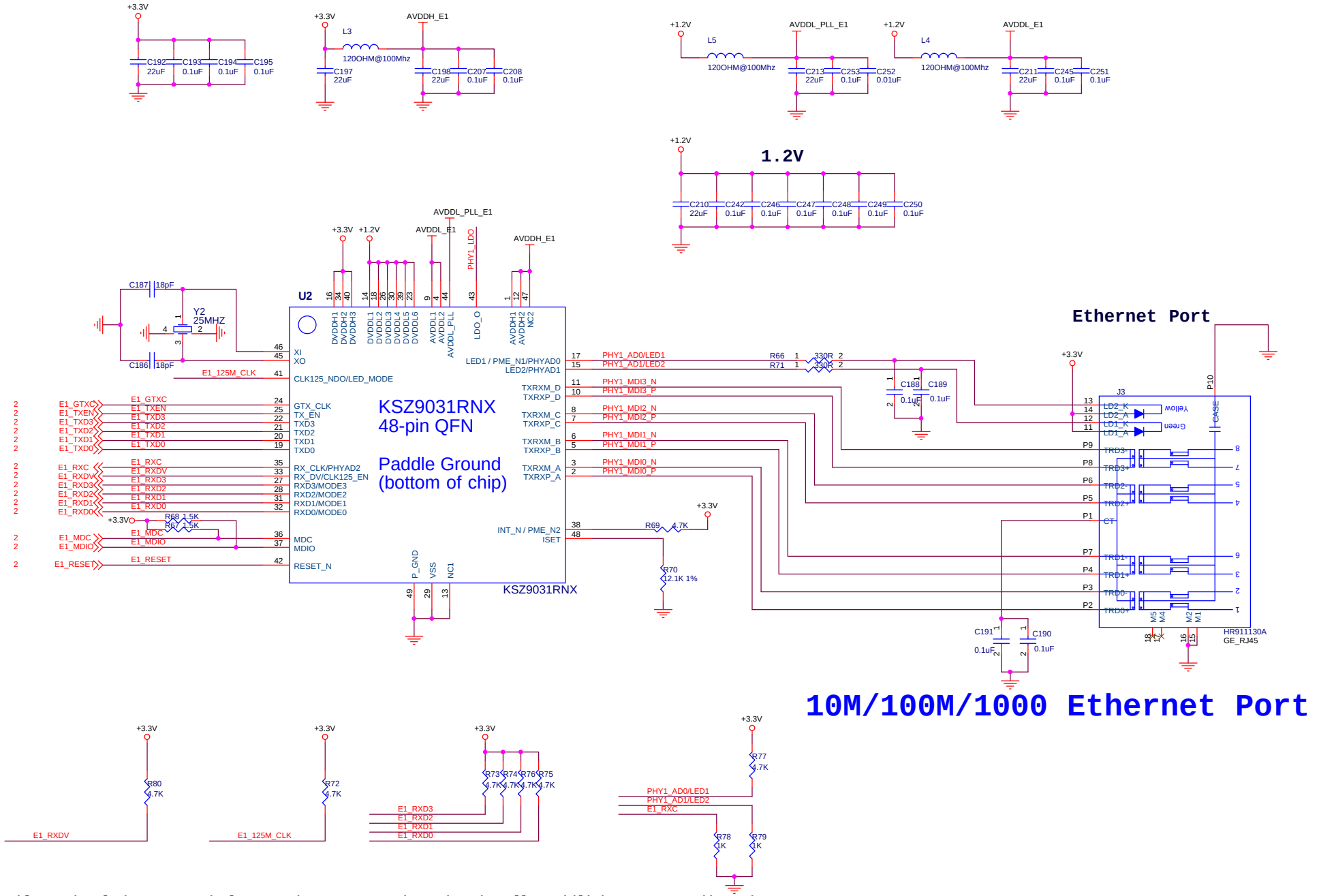

ALINX Confidential

ALINX	Http://www.heijin.org	
Title	PAGE03 Ethernet1	
Size	Document Number: AX7103扩展板 Schematics	Rev: 1.0
Date: Friday, February 02, 2018	Sheet 3 of 11	

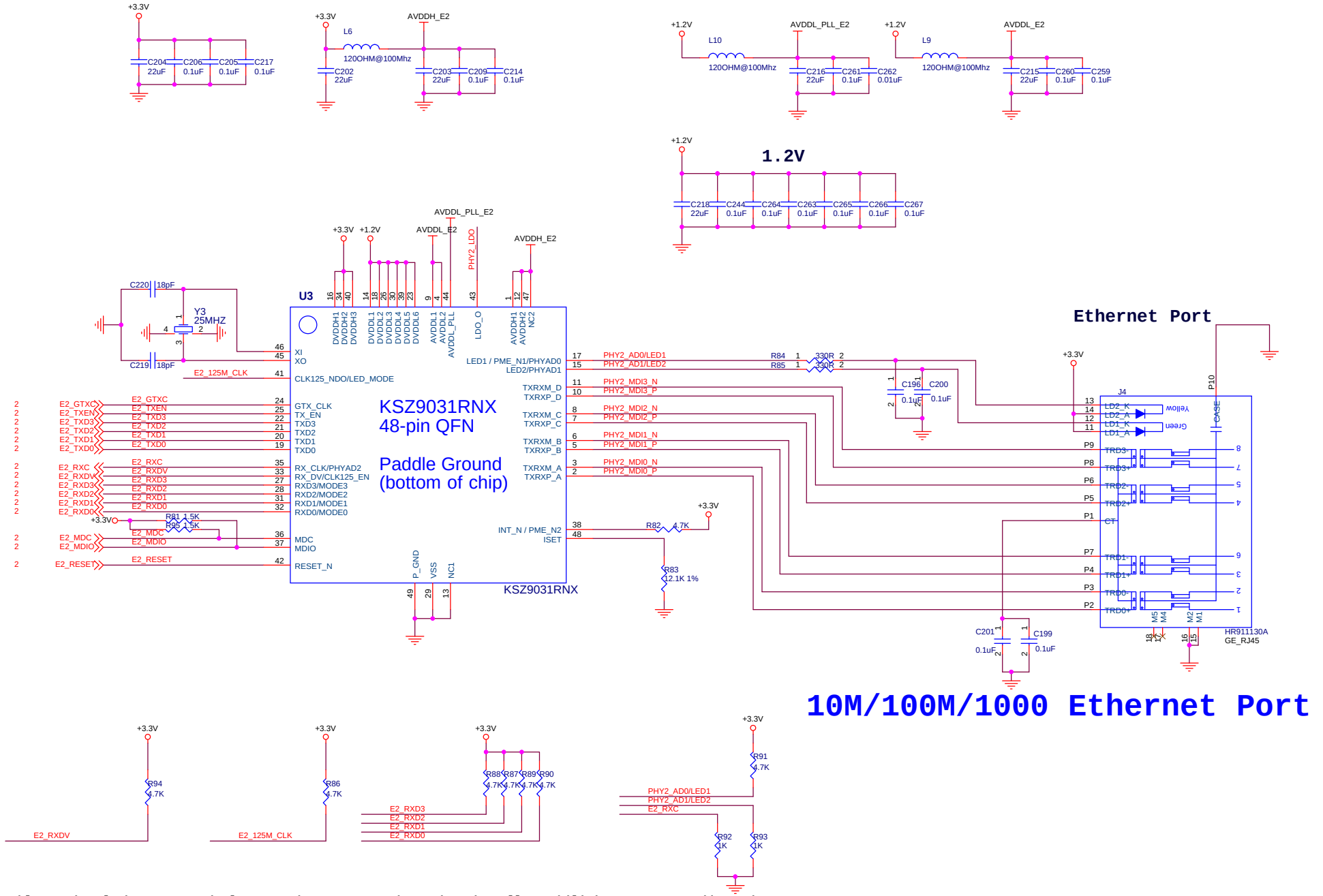

ALINX Confidential

ALINX Http://www.heijin.org

Title	PAGE04 Ethernet2	
Size	Document Number: AX7103扩展板 Schematics	Rev: 1.0
Date: Friday, February 02, 2018	Sheet 4 of 11	

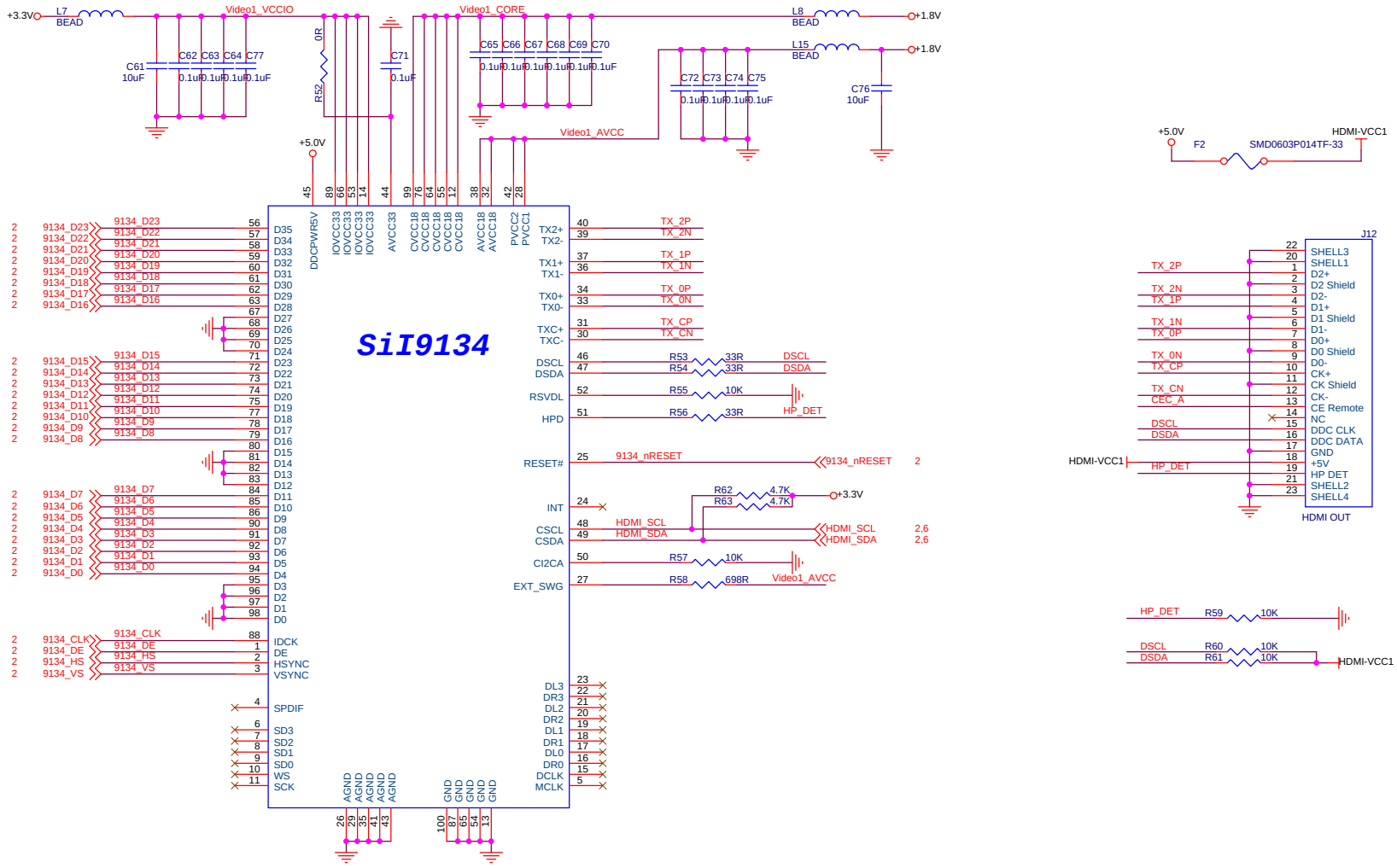

ALINX Confidential

ALINX Http://www.heijin.org

Title	PAGE05 HDMI_OUT	
Size	Document Number: AX7103扩展板 Schematics	Rev: 1.0
Date: Friday, February 02, 2018	Sheet 5 of 11	

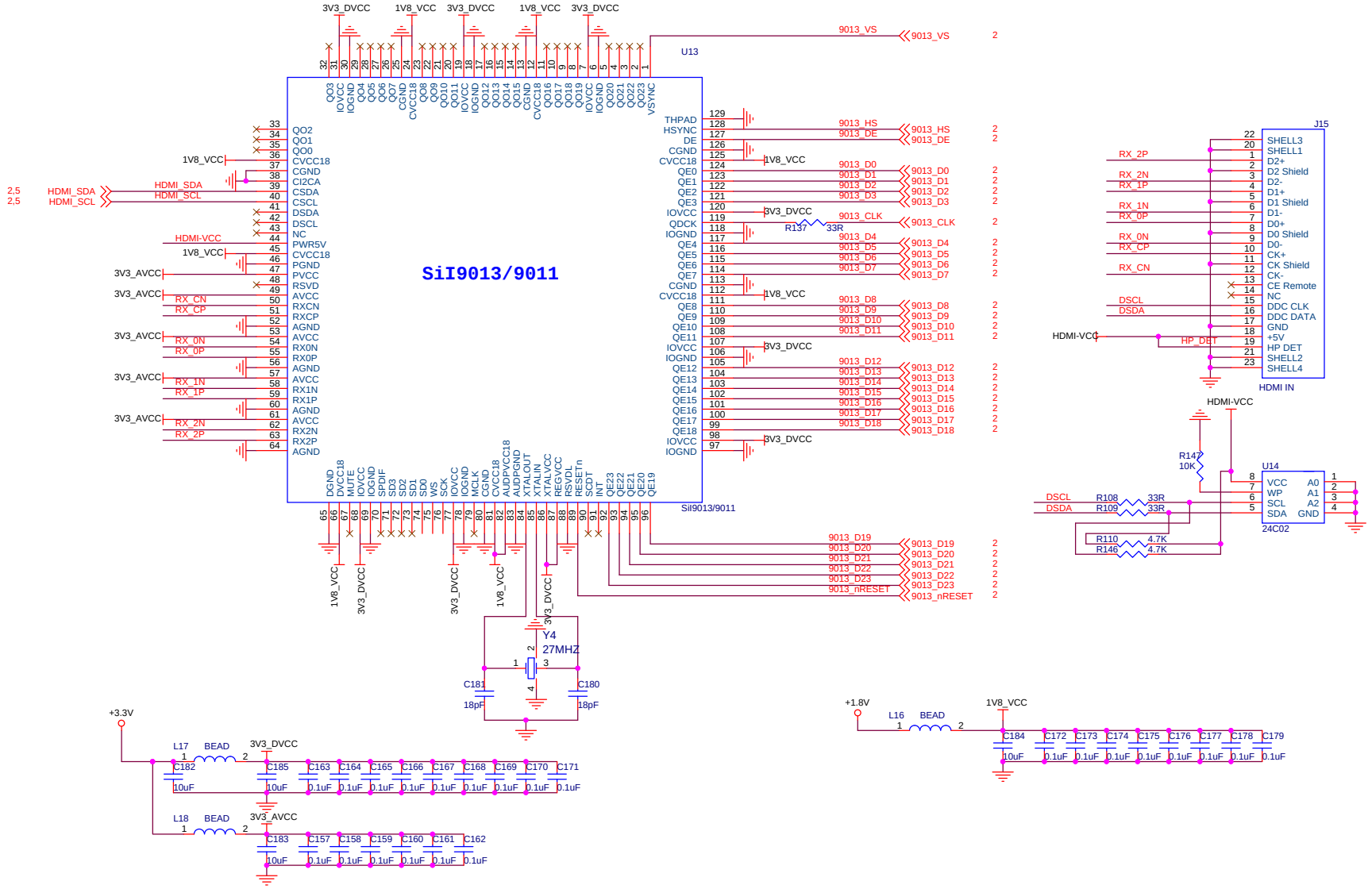

ALINX Confidential

ALINX	Http://www.heijin.org
Title	PAGE06 HDMI_IN
Size	Document Number: AX7103扩展板 Schematics; Rev: 1.0
Date:	Friday, February 02, 2018
Sheet	6 of 11

PCIE X4 SLOT

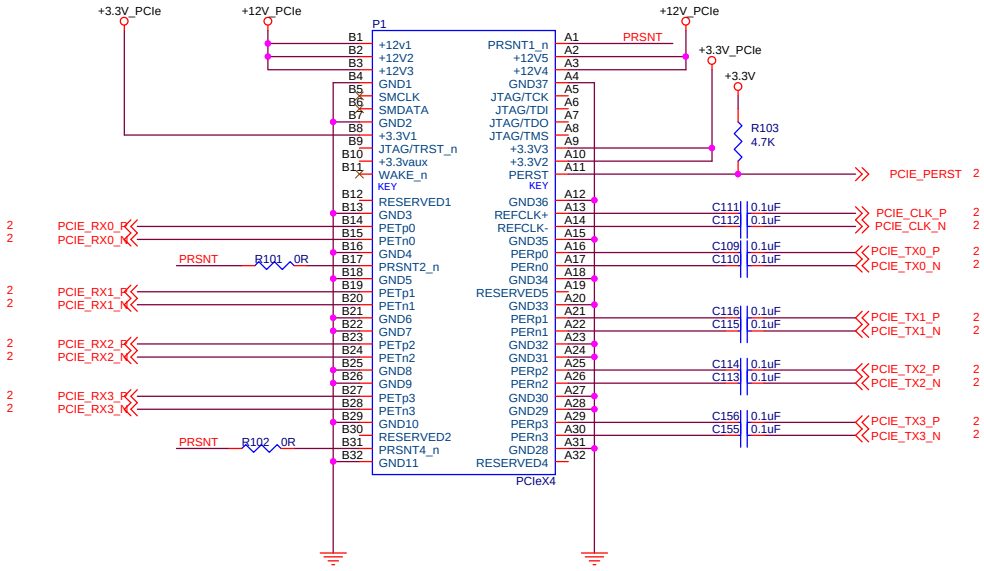

ALINX Confidential

ALINX Http://www.heijin.org

Title	PAGE07 PCIE	
Size	Document Number: AX7103扩展板 Schematics	Rev: 1.0
Date: Friday, February 02, 2018	Sheet 7 of 11	

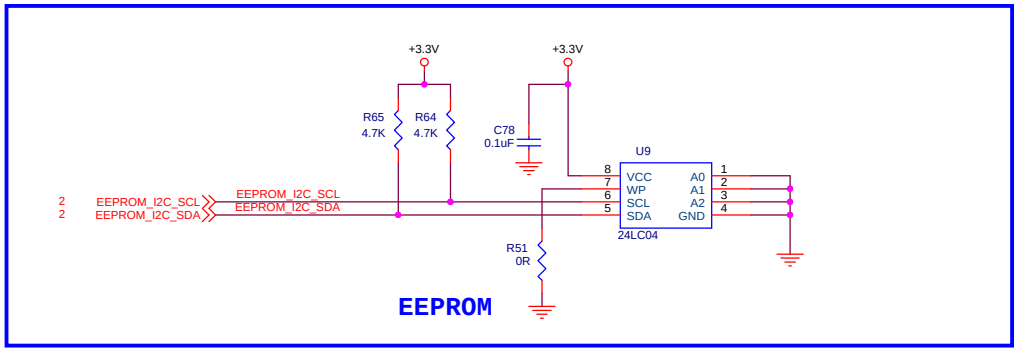

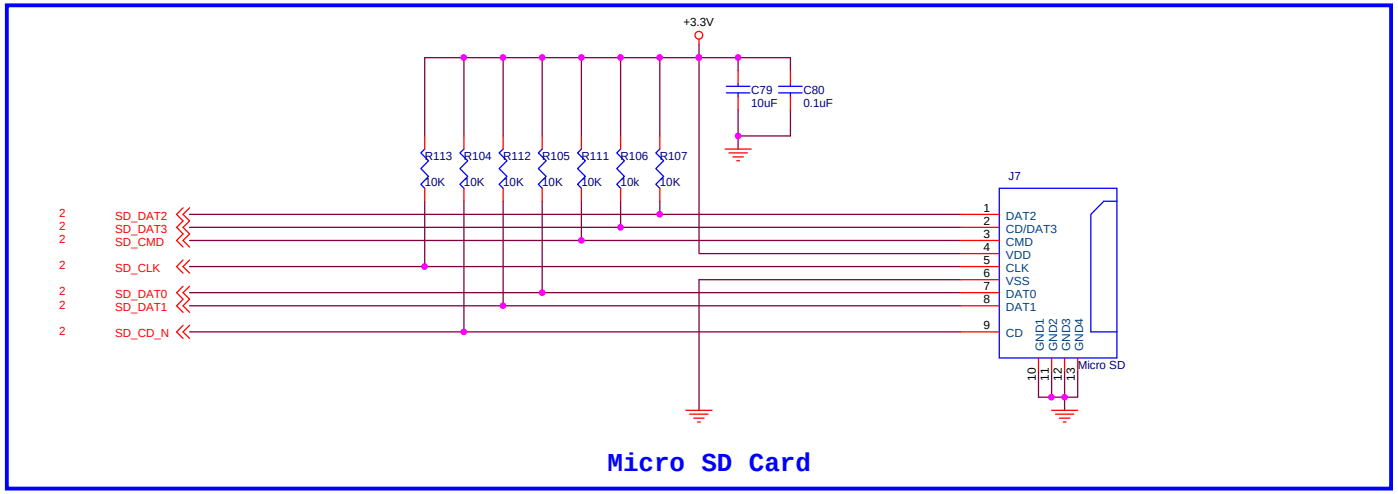

ALINX Confidential

ALINX Http://www.heijin.org

Title	PAGE08 EEPROM & SD	
Size	Document Number: AX7103扩展板 Schematics	Rev: 1.0
Date: Friday, February 02, 2018	Sheet 8 of 11	

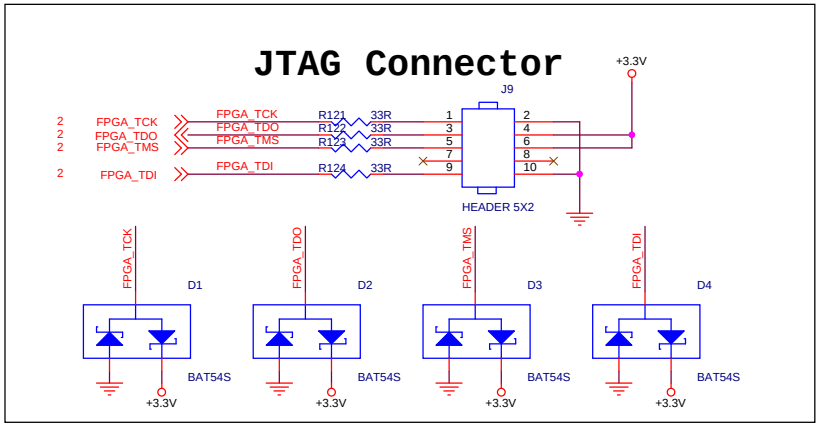

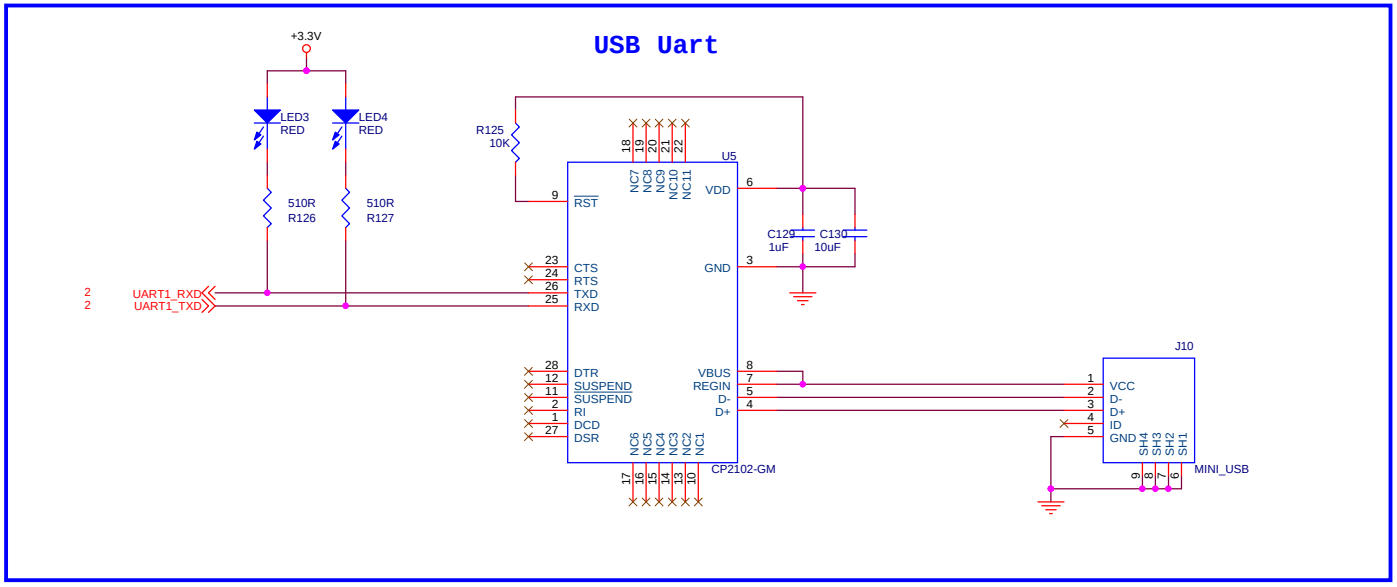

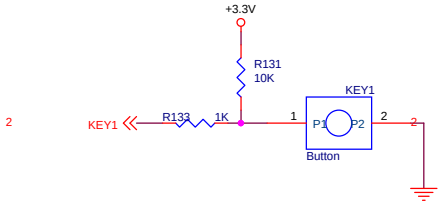

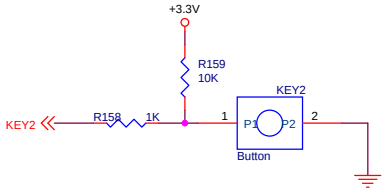

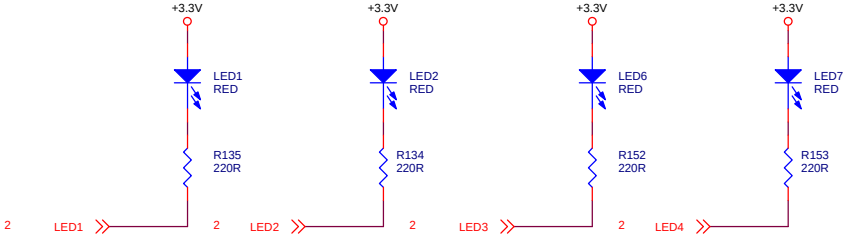

ALINX Confidential

ALINX	Http://www.heijin.org
Title	PAGE09 USB UART & JTAG
Size	Document Number: AX7103扩展板 Schematics — Rev: 1.0
Date:	Friday, February 02, 2018 — Sheet 9 of 11

FPGA 40 PIN External IO

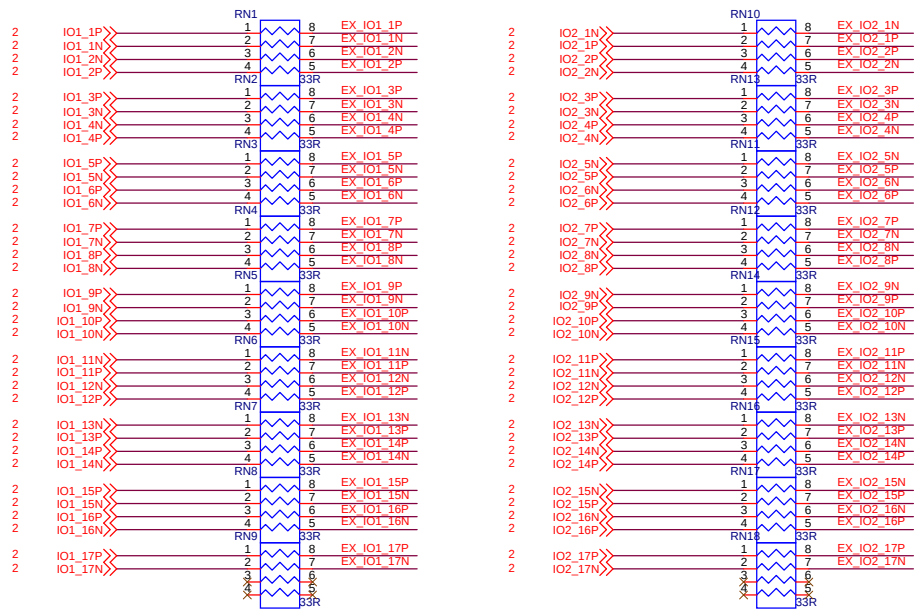

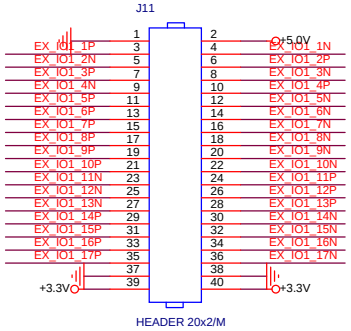

FPGA 40 PIN External IO

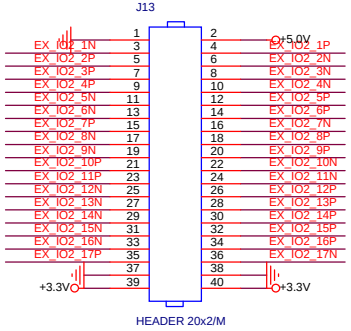

XADC Connector

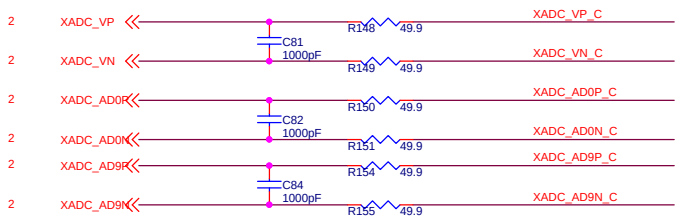

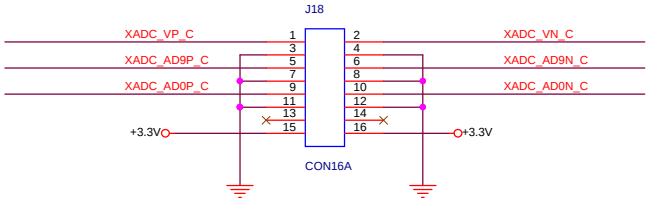

ALINX Http://www.heijin.org

Title	PAGE10 EX IO & XADC	
Size	Document Number: AX7103扩展板 Schematics	Rev: 1.0
Date: Friday, February 02, 2018	Sheet 10 of 11	

ALINX Confidential

12V/2A AC Adapter

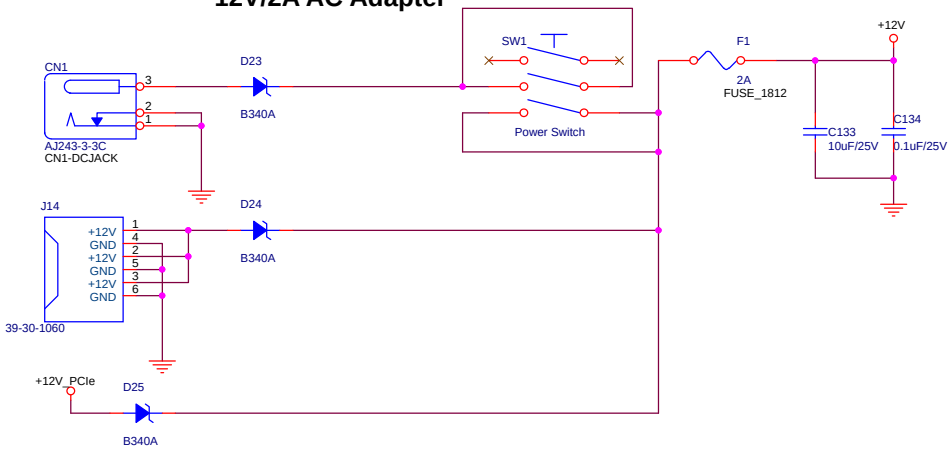

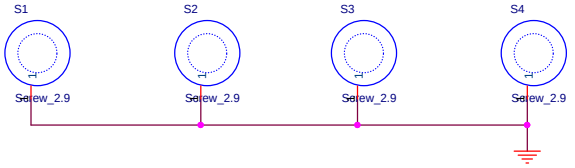

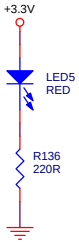

+5.0V POWER

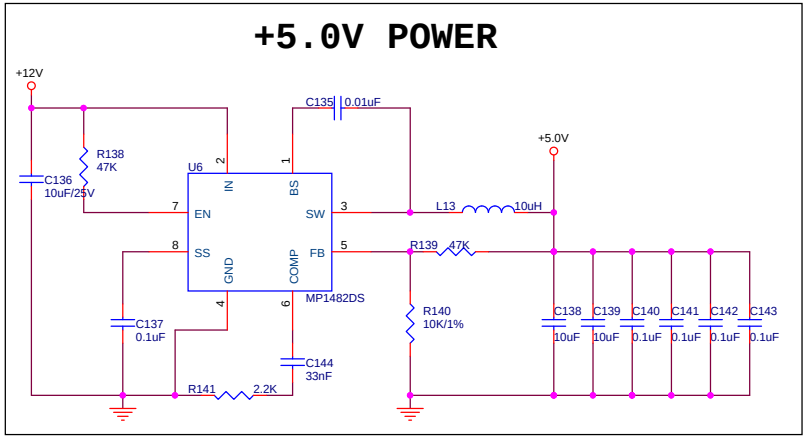

+3.3V POWER

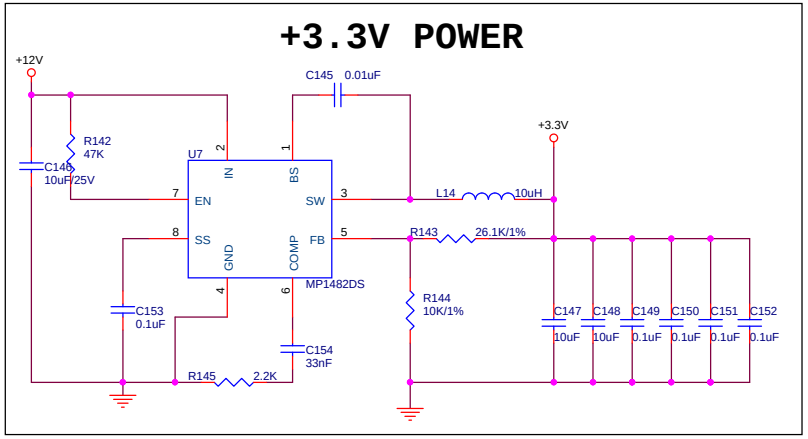

+1.8V POWER

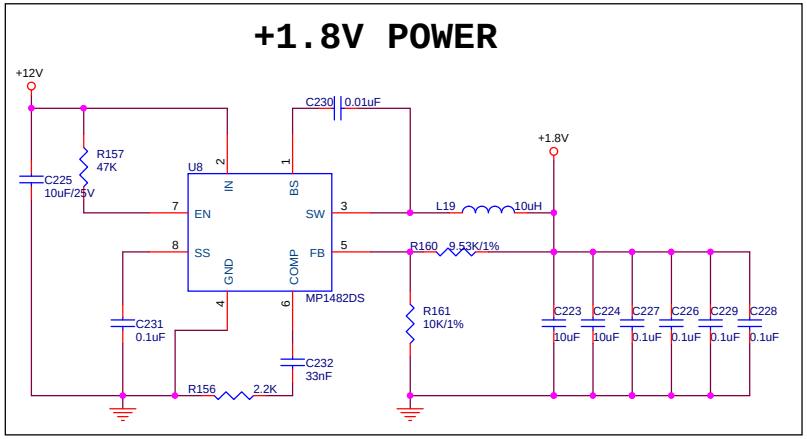

+1.2V POWER

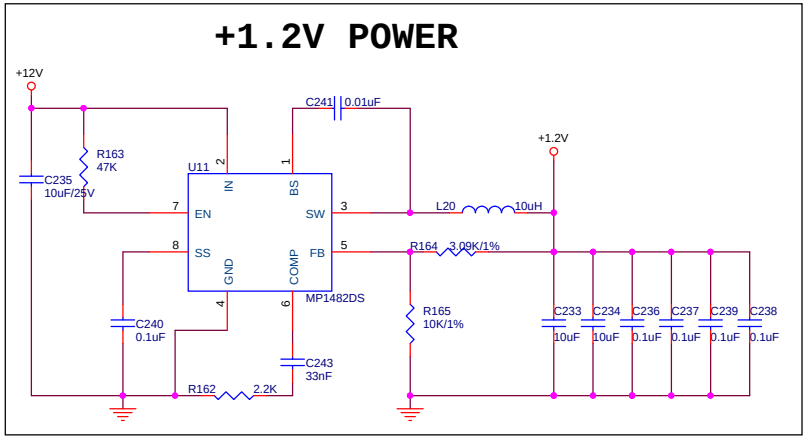

ALINX Http://www.heijin.org

Title	PAGE11 Power	
Size	Document Number: AX7103扩展板 Schematics	Rev: 1.0
Date: Friday, February 02, 2018	Sheet 11 of 11	

ALINX Confidential