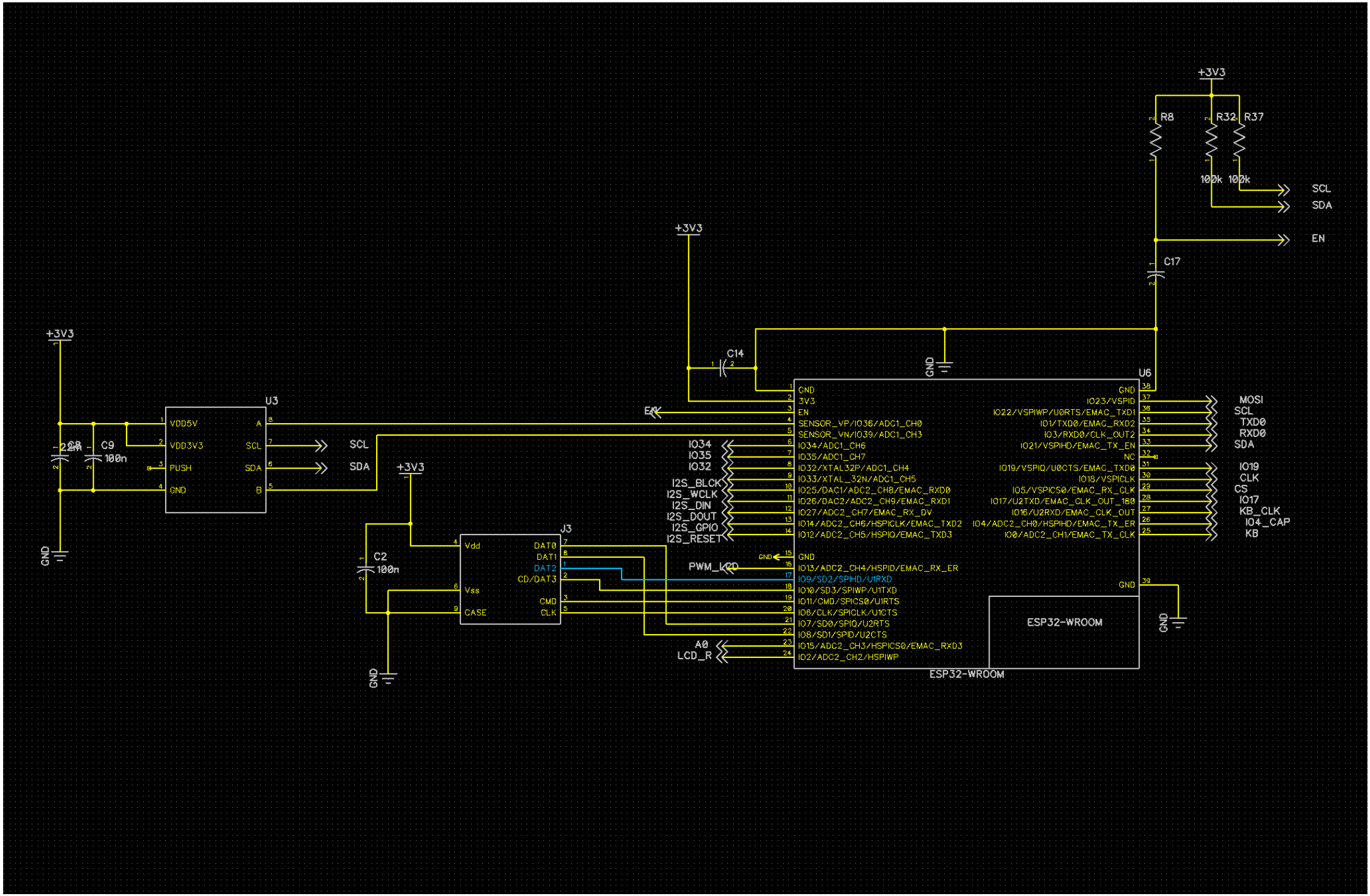
+3V3
R8
R32
R37
100k
100k
SCL
SDA
EN
C17
C14
GND
U6
U3
VDD5V
VDD3V3
PUSH
GND
A
SCL
SDA
B
C8
2.2u
C9
100n
C2
100n
J3
Vdd
Vss
CASE
DAT0
DAT1
DAT2
CD/DAT3
CMD
CLK
GND
3V3
EN
SENSOR_VP/IO36/ADC1_CH0
SENSOR_VN/IO39/ADC1_CH3
IO34/ADC1_CH6
IO35/ADC1_CH7
IO32/XTAL32P/ADC1_CH4
IO33/XTAL_32N/ADC1_CH5
IO25/DAC1/ADC2_CH8/EMAC_RXD0
IO26/DAC2/ADC2_CH9/EMAC_RXD1
IO27/ADC2_CH7/EMAC_RX_DV
IO14/ADC2_CH6/HSPICLK/EMAC_TXD2
IO12/ADC2_CH5/HSPIQ/EMAC_TXD3
GND
IO13/ADC2_CH4/HSPID/EMAC_RX_ER
IO9/SD2/SPIHD/U1RXD
IO10/SD3/SPIWP/U1TXD
IO11/CMD/SPICS0/U1RTS
IO6/CLK/SPICLK/U1CTS
IO7/SD0/SPIQ/U2RTS
IO8/SD1/SPID/U2CTS
IO15/ADC2_CH3/HSPICS0/EMAC_RXD3
IO2/ADC2_CH2/HSPIWP
GND
IO23/VSPID
IO22/VSPIWP/U0RTS/EMAC_TXD1
IO1/TXD0/EMAC_RXD2
IO3/RXD0/CLK_OUT2
IO21/VSPIHD/EMAC_TX_EN
NC
IO19/VSPIQ/U0CTS/EMAC_TXD0
IO18/VSPICLK
IO5/VSPICS0/EMAC_RX_CLK
IO17/U2TXD/EMAC_CLK_OUT_180
IO16/U2RXD/EMAC_CLK_OUT
IO4/ADC2_CH0/HSPIHD/EMAC_TX_ER
IO0/ADC2_CH1/EMAC_TX_CLK
GND
ESP32-WROOM
ESP32-WROOM
MOSI
SCL
TXD0
RXD0
SDA
IO19
CLK
CS
IO17
KB_CLK
IO4_CAP
KB
IO34
IO35
IO32
I2S_BLCK
I2S_WCLK
I2S_DIN
I2S_DOUT
I2S_GPIO
I2S_RESET
PWM_LCD
A0
LCD_R

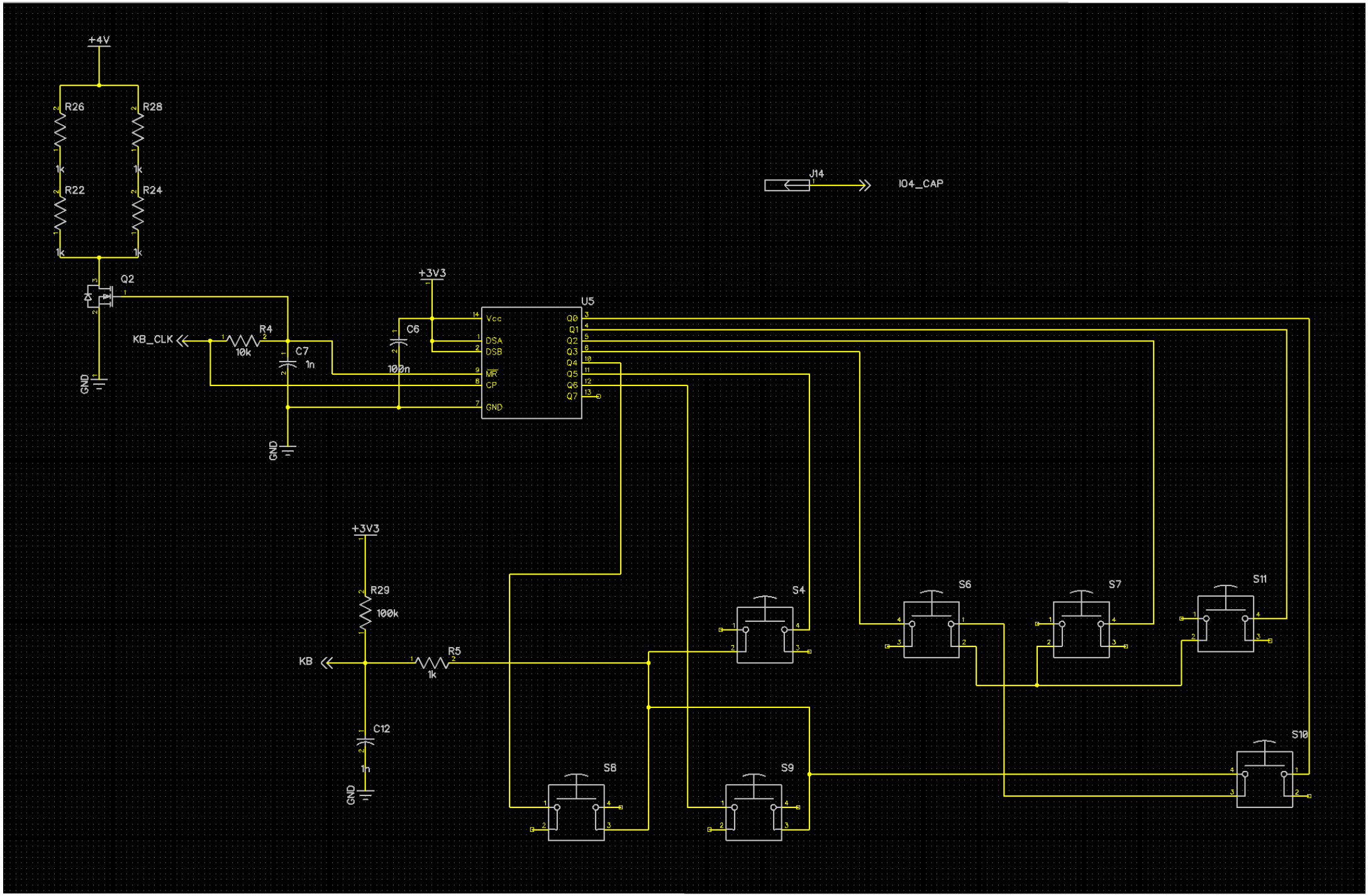
+4V
R26
R28
1k
R22
R24
Q2
GND
KB_CLK
R4
10k
C7
1n
+3V3
C6
100n
U5
Vcc
DSA
DSB
MR
CP
GND
Q0
Q1
Q2
Q3
Q4
Q5
Q6
Q7
J14
IO4_CAP
R29
100k
KB
R5
C12
S4
S6
S7
S11
S8
S9
S10

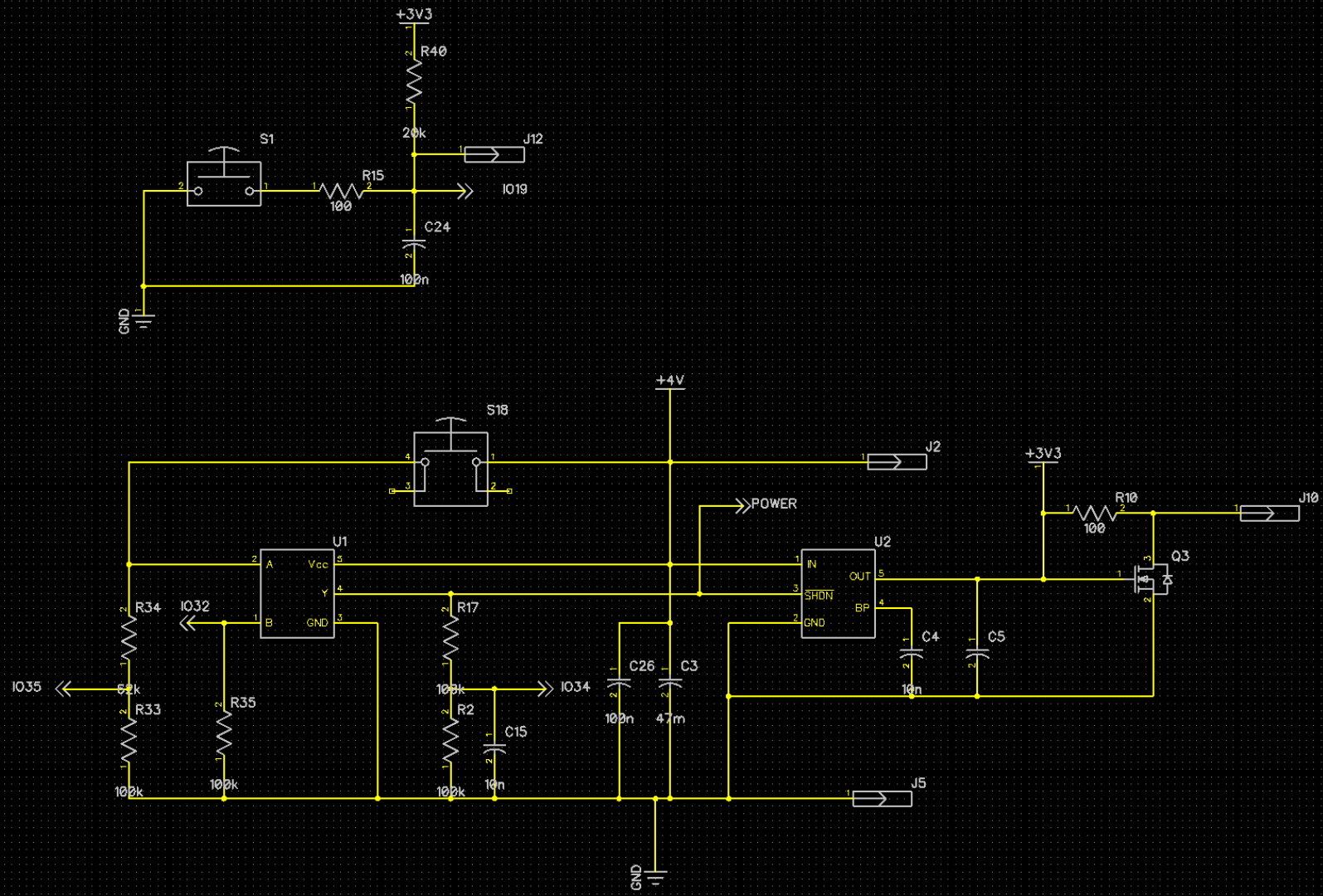
+3V3
R40
20k
J12
S1
R15
100
IO19
C24
100n
GND
+4V
S18
J2
POWER
+3V3
R10
100
J10
U1
A
Vcc
Y
B
GND
U2
IN
OUT
SHDN
BP
GND
Q3
R34
IO32
R17
C4
C5
IO35
62k
R33
R35
100k
100k
100k
R2
C15
10n
IO34
C26
C3
100n
47m
10n
J5
GND

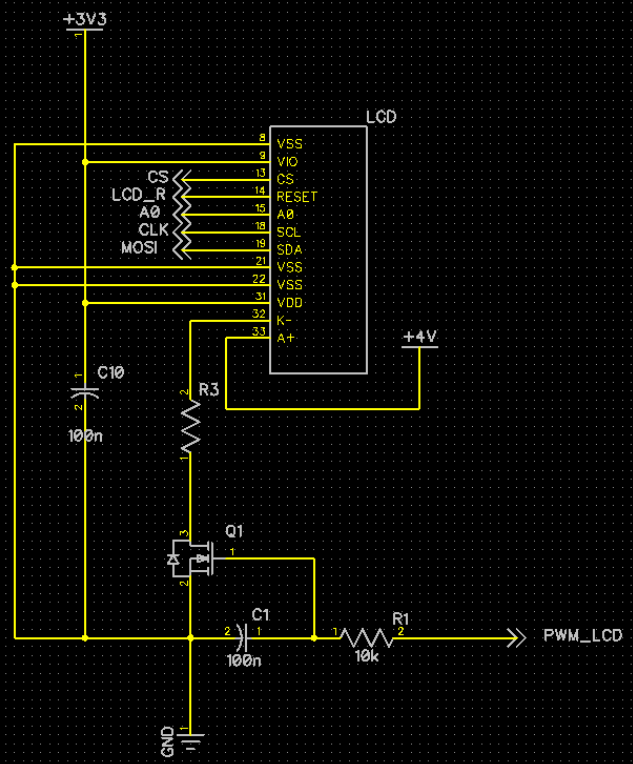
+3V3
LCD
VSS
VIO
CS
RESET
A0
SCL
SDA
VSS
VSS
VDD
K-
A+
CS
LCD_R
A0
CLK
MOSI
+4V
C10
100n
R3
Q1
C1
100n
R1
10k
PWM_LCD
GND

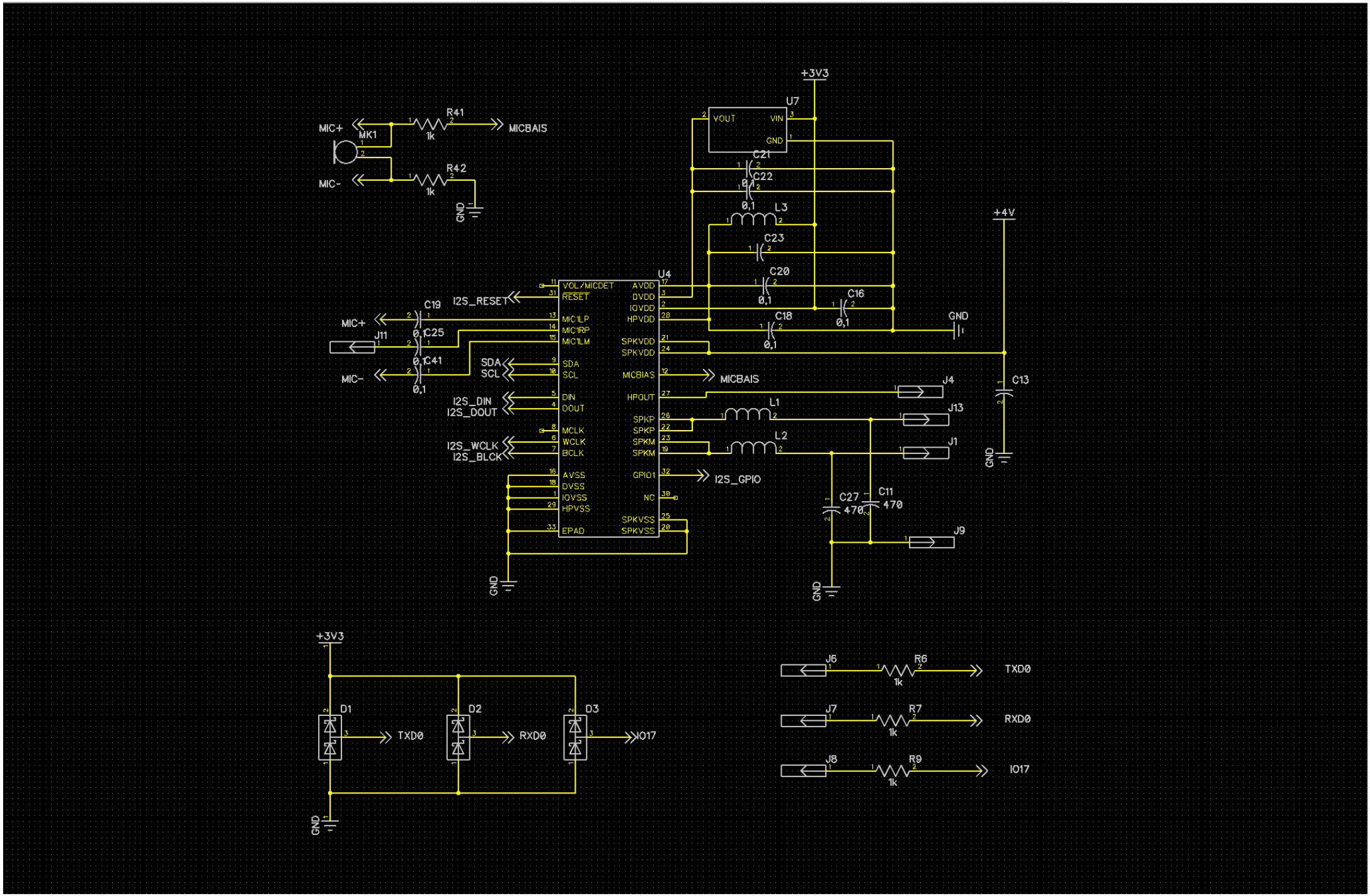
MIC+
MK1
MIC-
R41
1k
R42
1k
MICBAIS
GND
+3V3
U7
VOUT
VIN
GND
C21
C22
0,1
L3
C23
C20
0,1
C16
0,1
C18
0,1
+4V
U4
VOL/MICDET
RESET
MIC1LP
MIC1RP
MIC1LM
SDA
SCL
DIN
DOUT
MCLK
WCLK
BCLK
AVSS
DVSS
IOVSS
HPVSS
EPAD
AVDD
DVDD
IOVDD
HPVDD
SPKVDD
SPKVDD
MICBAIS
HPOUT
SPKP
SPKP
SPKM
SPKM
GPIO1
NC
SPKVSS
SPKVSS
I2S_RESET
C19
J11
C25
C41
SDA
SCL
I2S_DIN
I2S_DOUT
I2S_WCLK
I2S_BLCK
J4
J13
J1
J9
L1
L2
C13
C27
470
C11
470
I2S_GPIO
D1
D2
D3
TXD0
RXD0
IO17
J6
J7
J8
R6
R7
R9

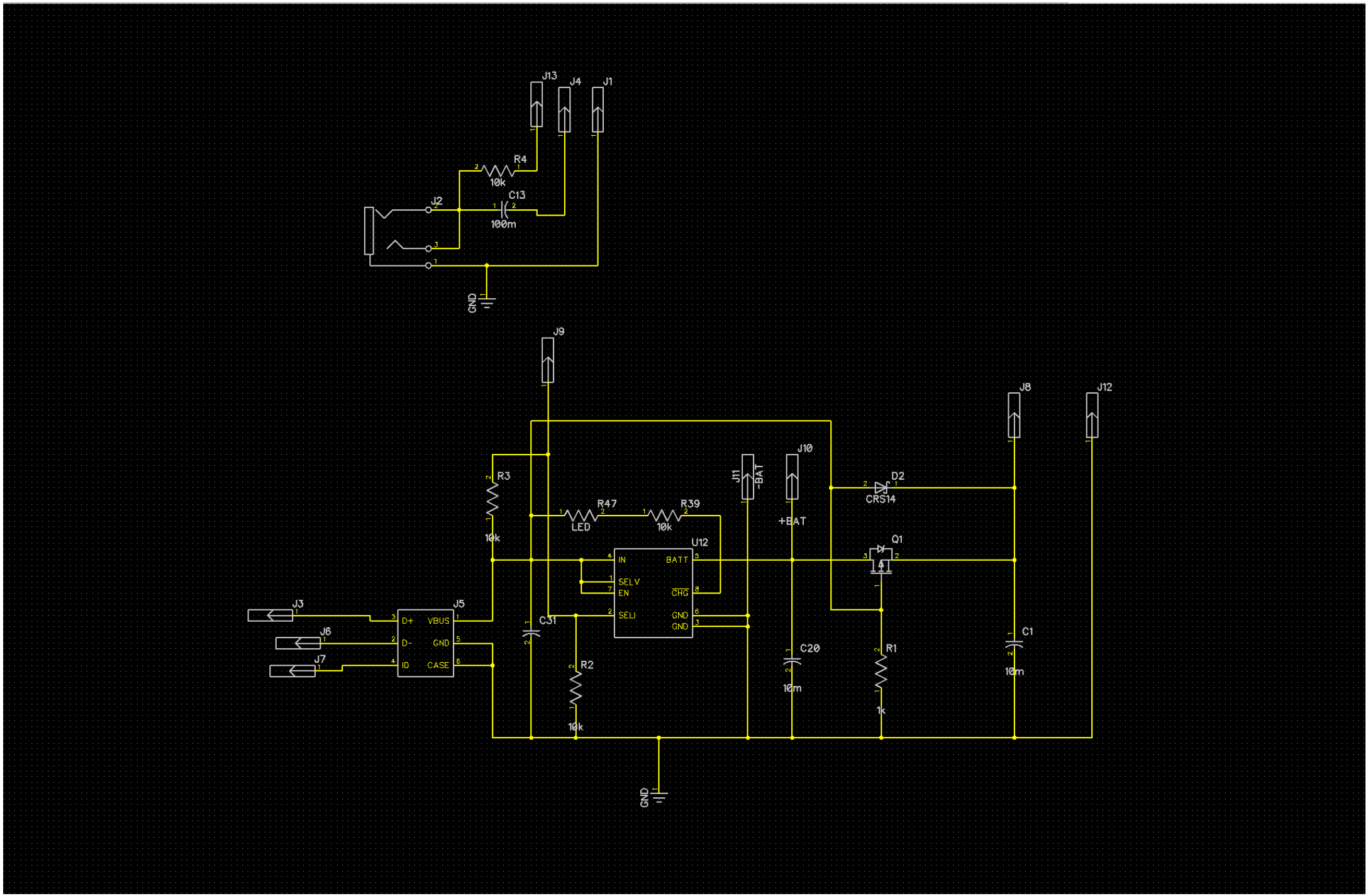
J13
J4
J1
R4
10k
J2
C13
100m
GND
J9
J8
J12
J10
J11
-BAT
+BAT
D2
CRS14
R3
10k
R47
LED
R39
10k
U12
IN
BATT
SELV
EN
CHG
SELI
GND
GND
Q1
J3
J6
J7
J5
D+
VBUS
D-
GND
ID
CASE
C31
R2
10k
C20
10m
R1
1k
C1
10m
GND