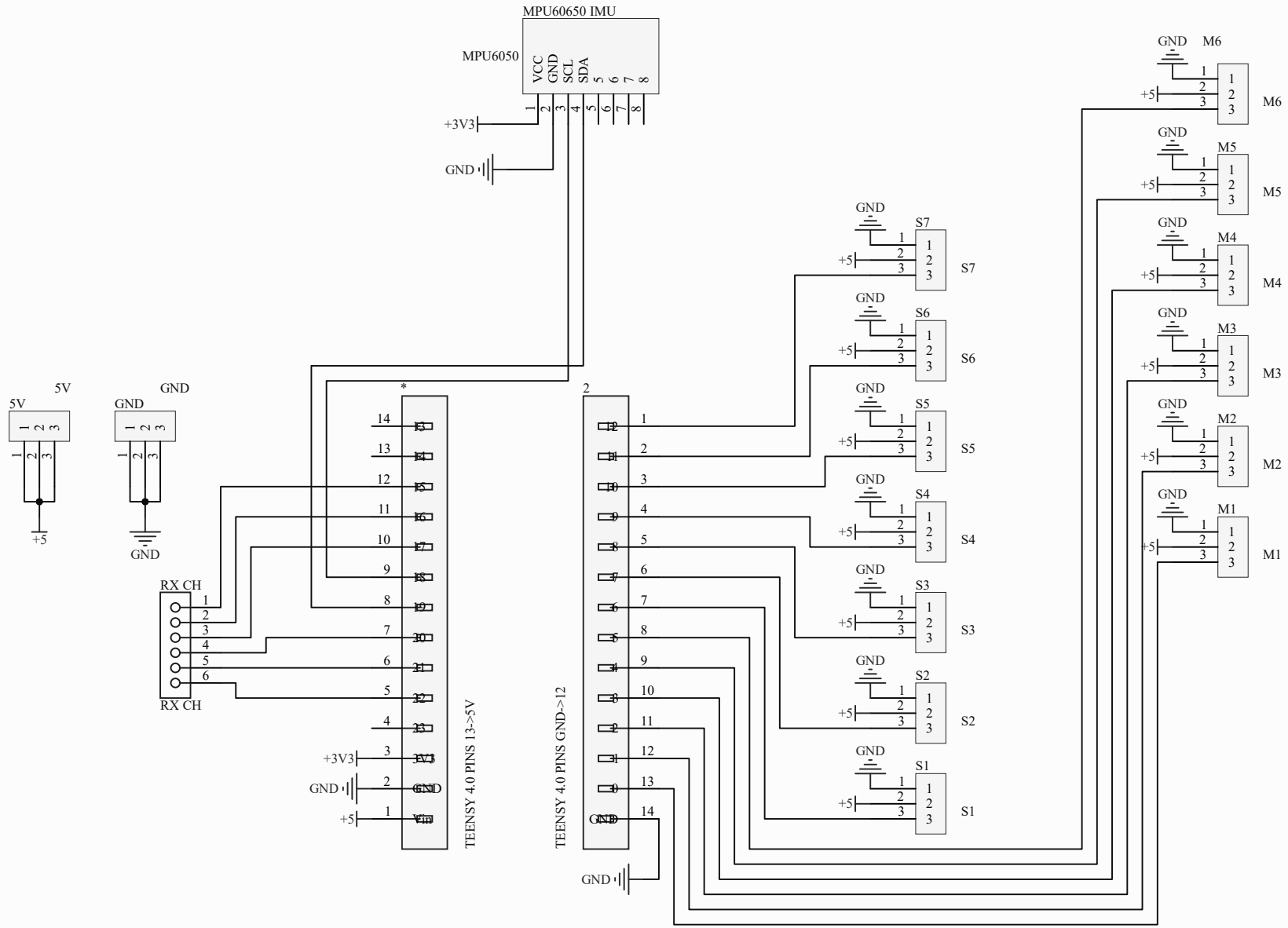

Title	**Universal Drone Flight Controller v1**	
Size A4	Number	Revision **Version 1**
Date: 1/19/2023		Sheet **1** of **1**
File: Sheet1.SchDoc		Drawn By: **Alexandros Nikolaidis**