DIGITAL INPUTS

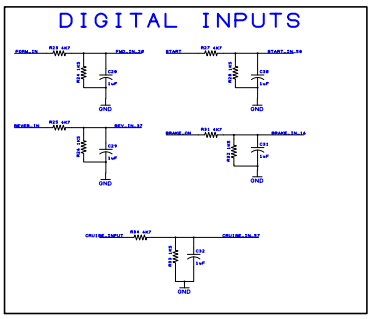

ENCODER

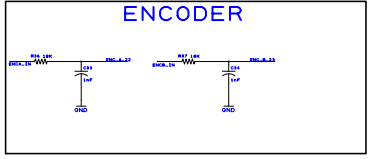

DC BUS DISCH CONTROL

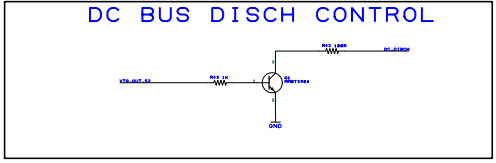

INPUT FILTERS

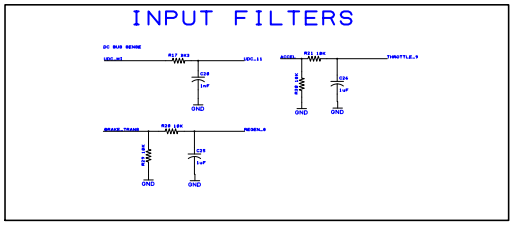

DIGITAL OUTPUTS

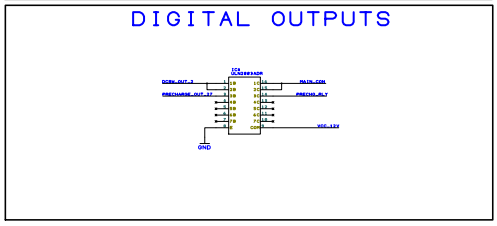

POWER SUPPLY

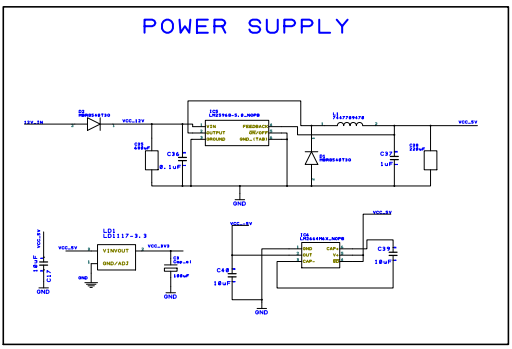

LOGIC SECTION

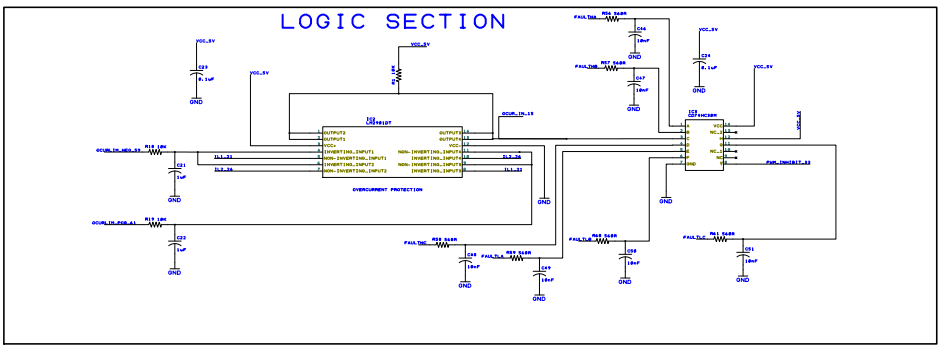

CONNECTORS

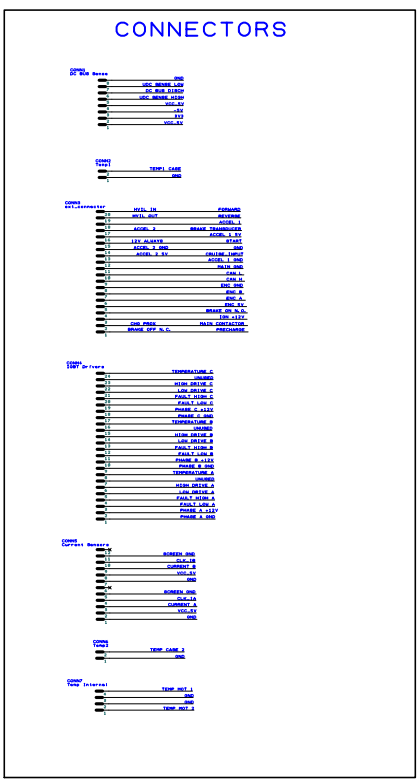

MOTOR CONTROL CPU

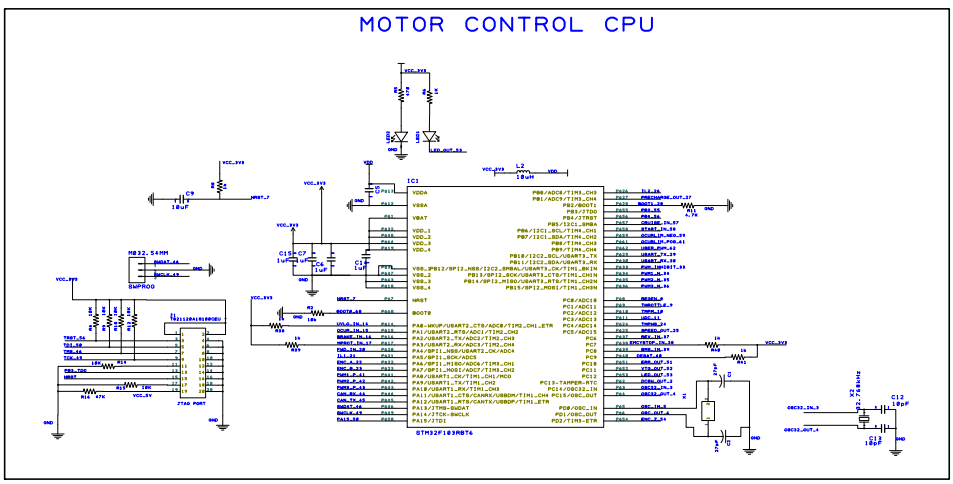

CAN BUS

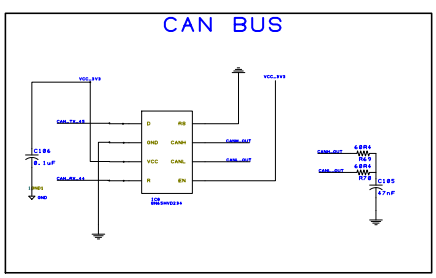

RS232

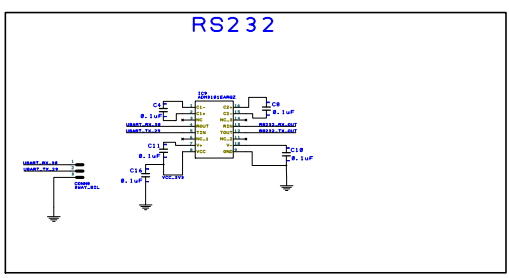

CURRENT SENSOR FILTER

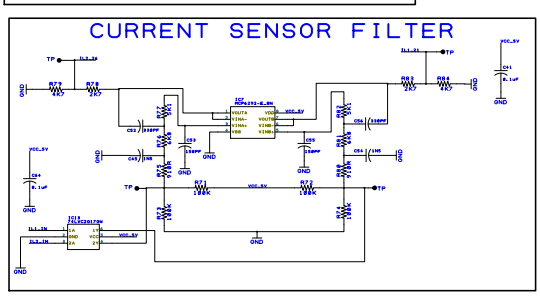

UNUSED PINS

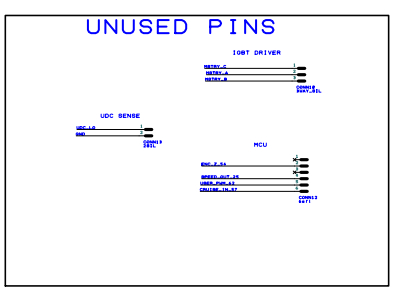

PWM + CLOCK DRIVER

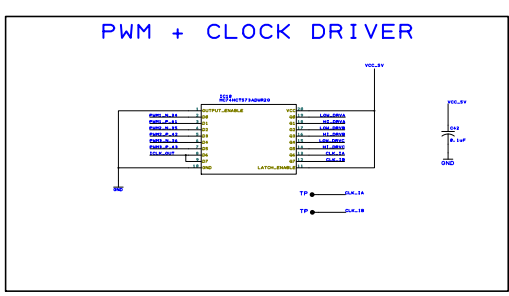

CURRENT SENSORS CLOCK

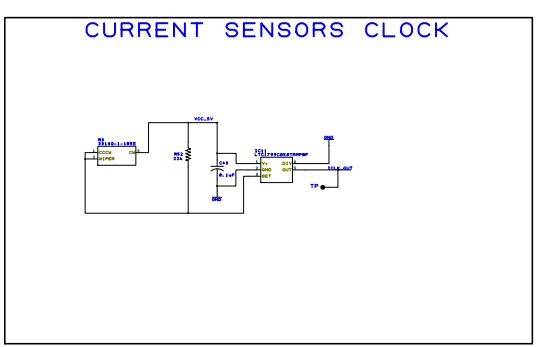

TEMP SENSOR MUX

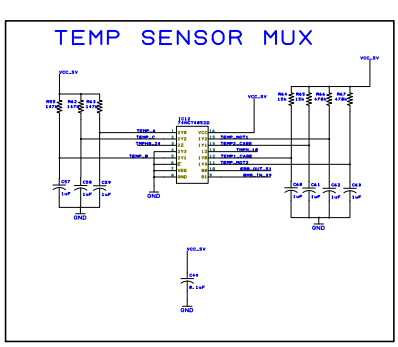
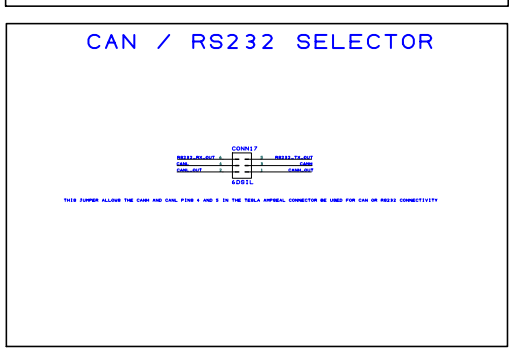
CAN / RS232 SELECTOR