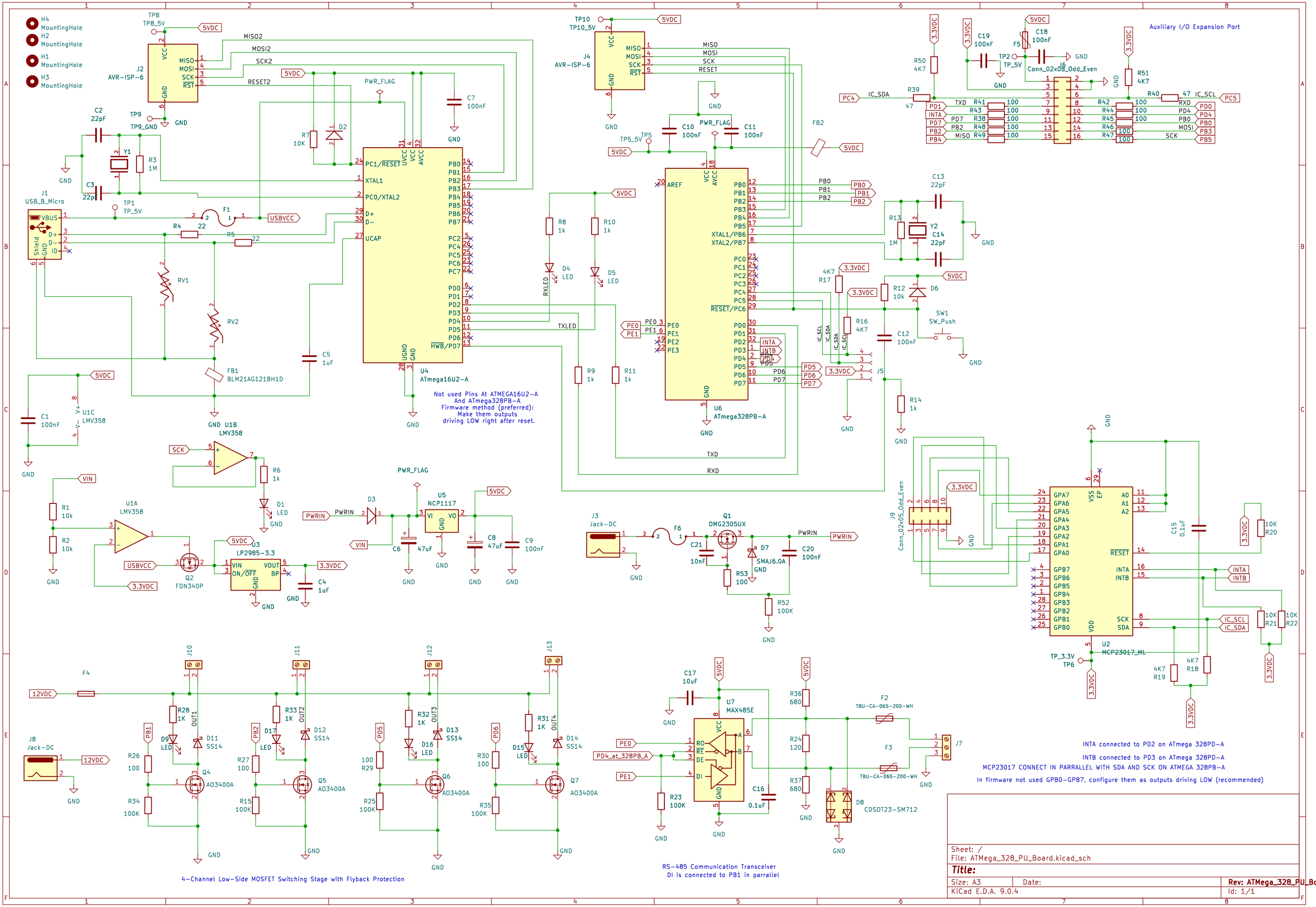
Auxiliary I/O Expansion Port
Not used Pins At ATMEGA16U2-A
And ATmega328PB-A
Firmware method (preferred):
Make them outputs
driving LOW right after reset.
U4
ATmega16U2-A
U6
ATmega328PB-A
U2
MCP23017_ML
U5
NCP1117
U3
LP2985-3.3
U7
MAX485E
J2
AVR-ISP-6
J4
AVR-ISP-6
J1
USB_B_Micro
J6
Conn_02x08_Odd_Even
J9
Conn_02x05_Odd_Even
J3
Jack-DC
J8
Jack-DC
J5
J7
Q1
DMG2305UX
Q2
FDN340P
Q4
AO3400A
Q5
AO3400A
Q6
AO3400A
Q7
AO3400A
U1A
LMV358
U1B
LMV358
U1C
LMV358
INTA connected to PD2 on ATmega 328PD-A
INTB connected to PD3 on ATmega 328PD-A
MCP23017 CONNECT IN PARRALLEL WITH SDA AND SCK ON ATMEGA 328PB-A
In firmware not used GPB0-GPB7, configure them as outputs driving LOW (recommended)
4-Channel Low-Side MOSFET Switching Stage with Flyback Protection
RS-485 Communication Transceiver
DI is connected to PB1 in parrallel
Sheet: /
File: ATMega_328_PU_Board.kicad_sch
Title:
Size: A3
Date:
Rev: ATMega_328_PU_Board_p
KiCad E.D.A. 9.0.4
Id: 1/1