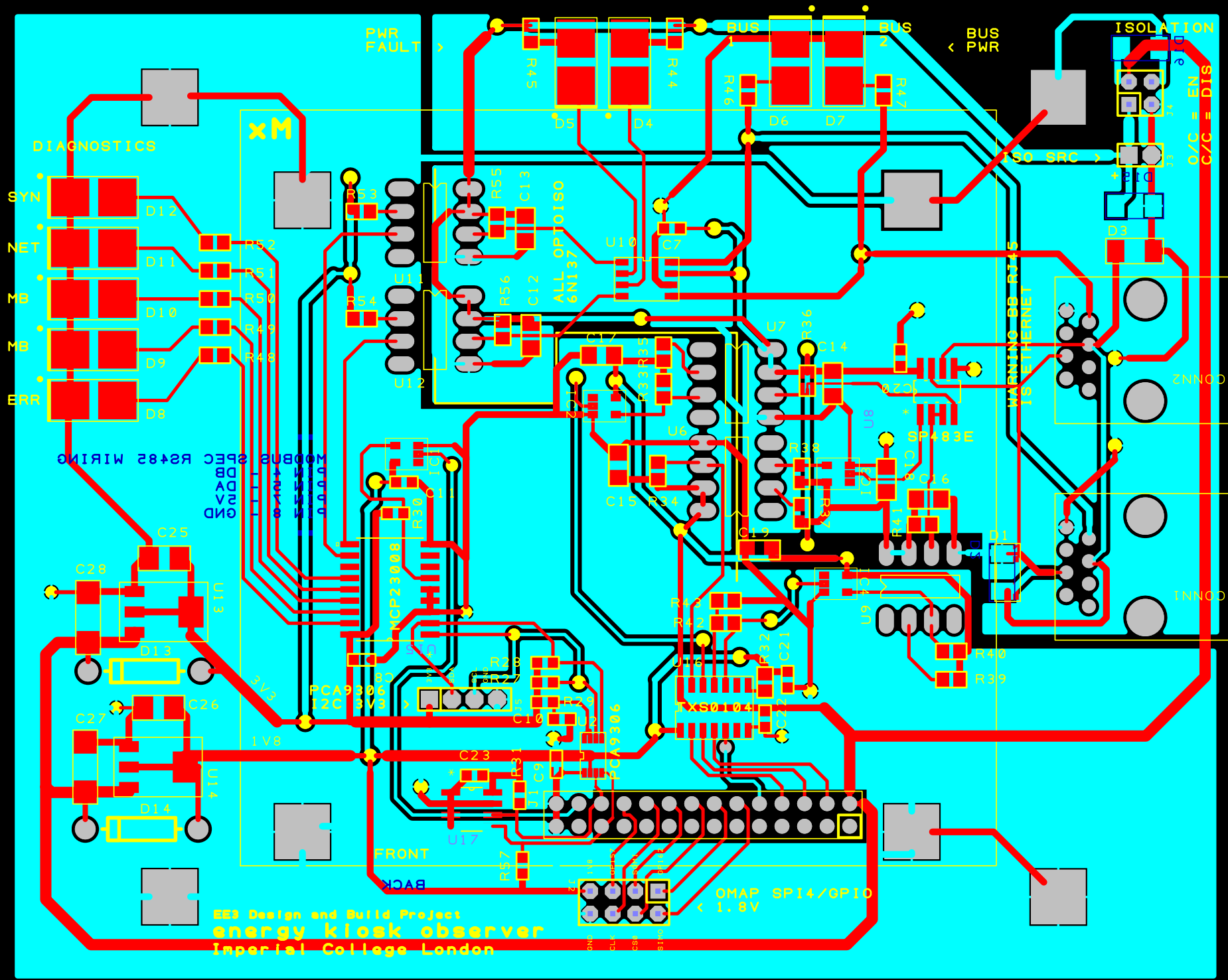

PWR FAULT
BUS 1
BUS 2
BUS PWR
ISOLATION
DIAGNOSTICS
SYN
NET
MB
MB
ERR
xM
ALL OPTOISO 6N137
ISO SRC
O/C = EN
C/C = DIS
WARNING BB RJ45 IS ETHERNET
CONN2
INNOD
SP483E
MCP23008
PCA9306 I2C 3V3
TXS0104
PCA9306
FRONT
BACK
OMAP SPI4/GPIO
1.8V
EE3 Design and Build Project
energy kiosk observer
Imperial College London

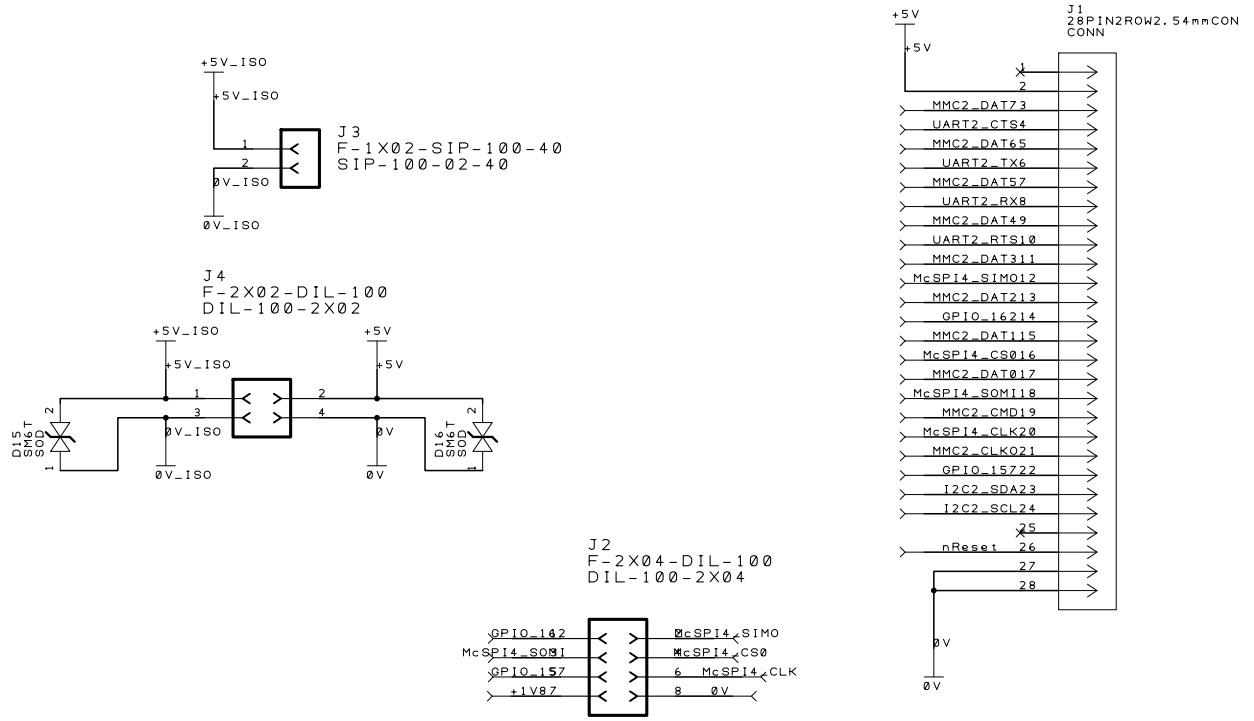

E	D	C	B	A	Drawn	Check	Projection Do Not Scale		
Drn	Drn	Drn	Drn	Project EKO Data Logger			Client e.quinox		
Chk	Chk	Chk	Chk	Title Connectors			Filename bbconnections.sch	Drawing No.	Sheet of

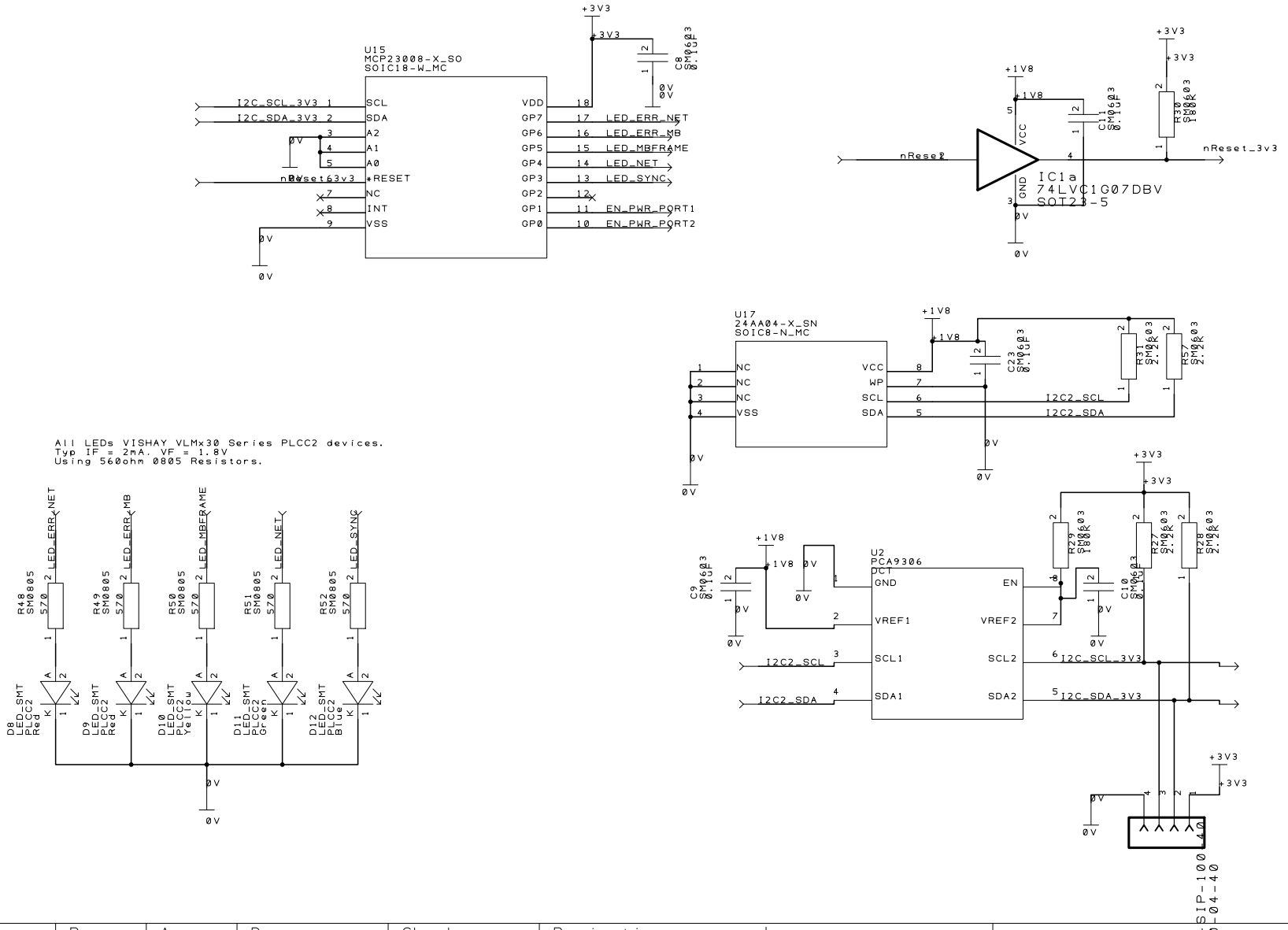

E	D	C	B	A	Drawn	Check	Projection Do Not Scale		
Drn	Drn	Drn	Drn	Project EKO Data Logger			Client e.quinox		
Chk	Chk	Chk	Chk	Title I2C / LED / GPIO			Filename GPI_I2C.sch	Drawing No.	Sheet 3 of

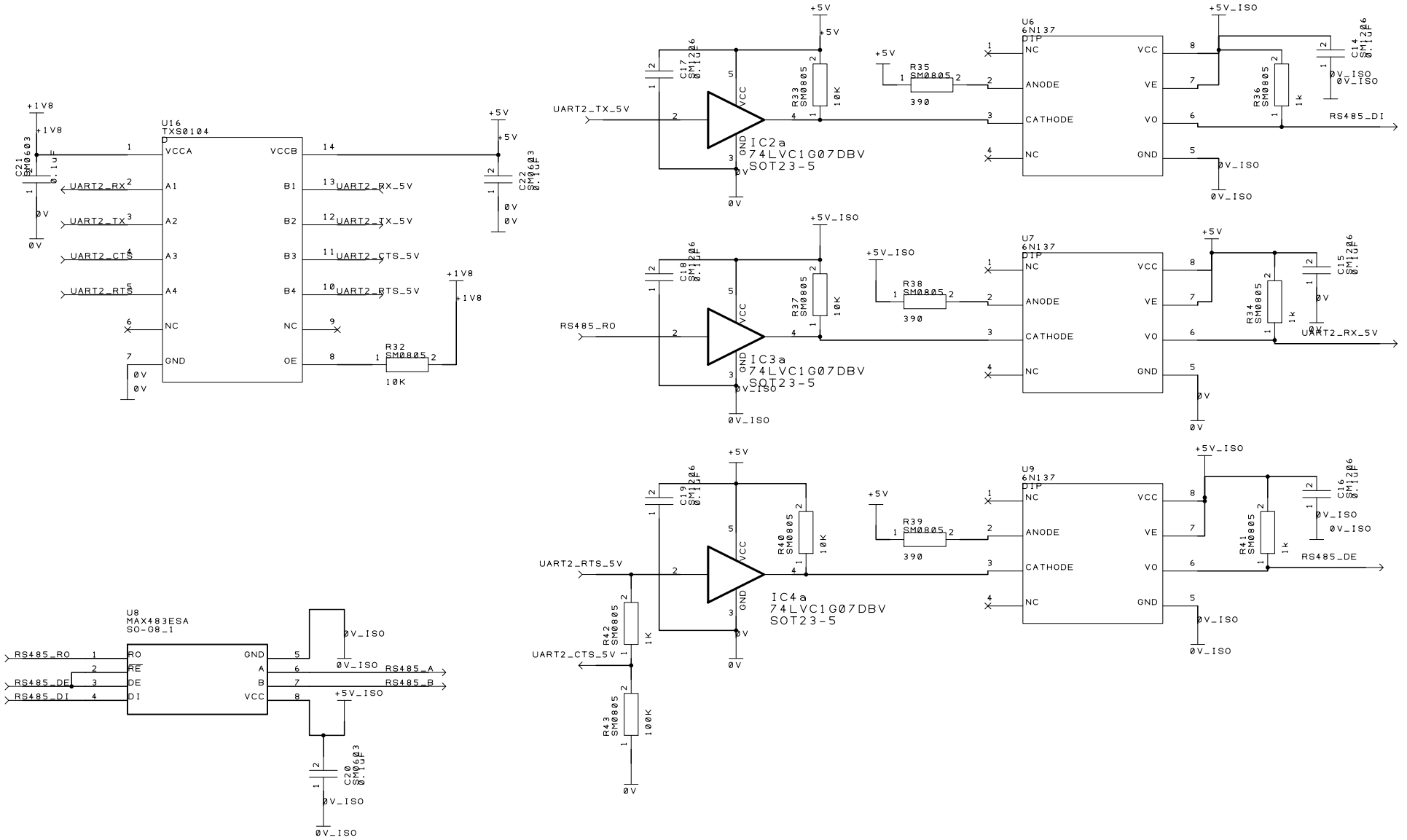

E	D	C	B	A	Drawn	Check	Projection Do Not Scale		
Drn	Drn	Drn	Drn	Project			Client		
Chk	Chk	Chk	Chk	Title			Filename	Drawing No.	Sheet of

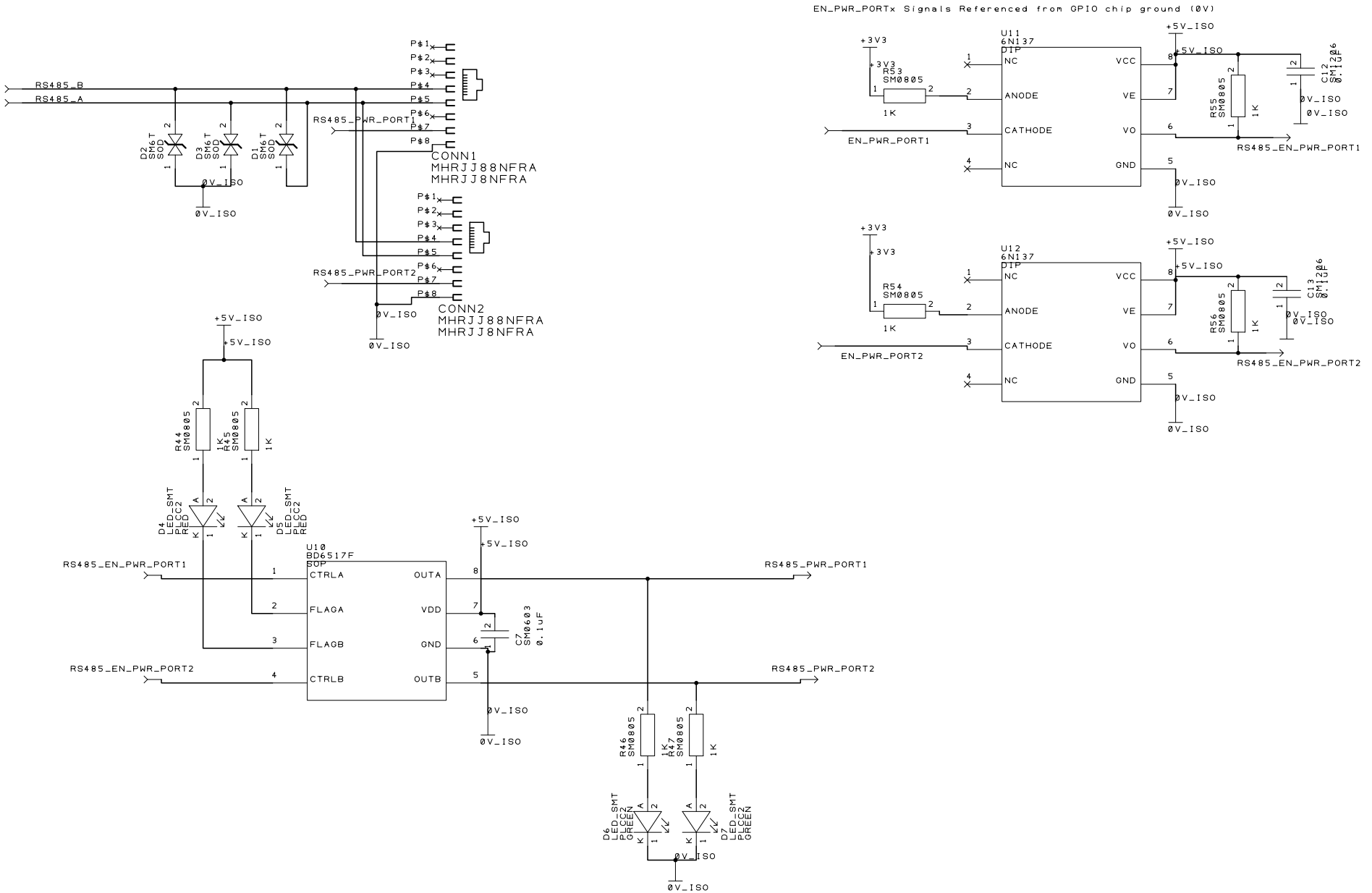

E	D	C	B	A	Drawn	Check	Projection Do Not Scale		
Drn	Drn	Drn	Drn	Project EKO Data Logger			Client e.quinox		
Chk	Chk	Chk	Chk	Title RS485			Filename RS485.sch	Drawing No.	Sheet of

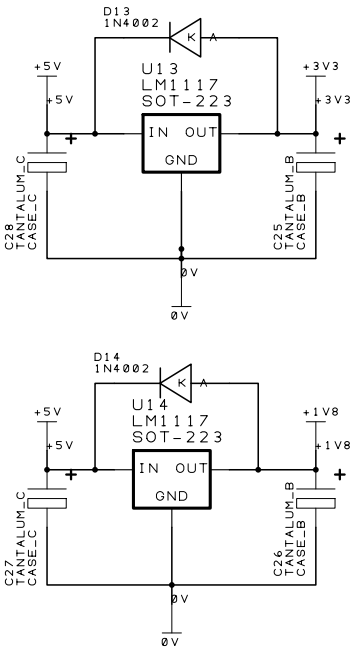

E	D	C	B	A	Drawn	Check	Projection Do Not Scale		
Drn	Drn	Drn	Drn	Project EKO Data Logger			Client e.quinox		
Chk	Chk	Chk	Chk	Title POWER			Filename POWER.sch	Drawing No.	Sheet of