RDK-101D 4K Cryocooler Outline Drawing

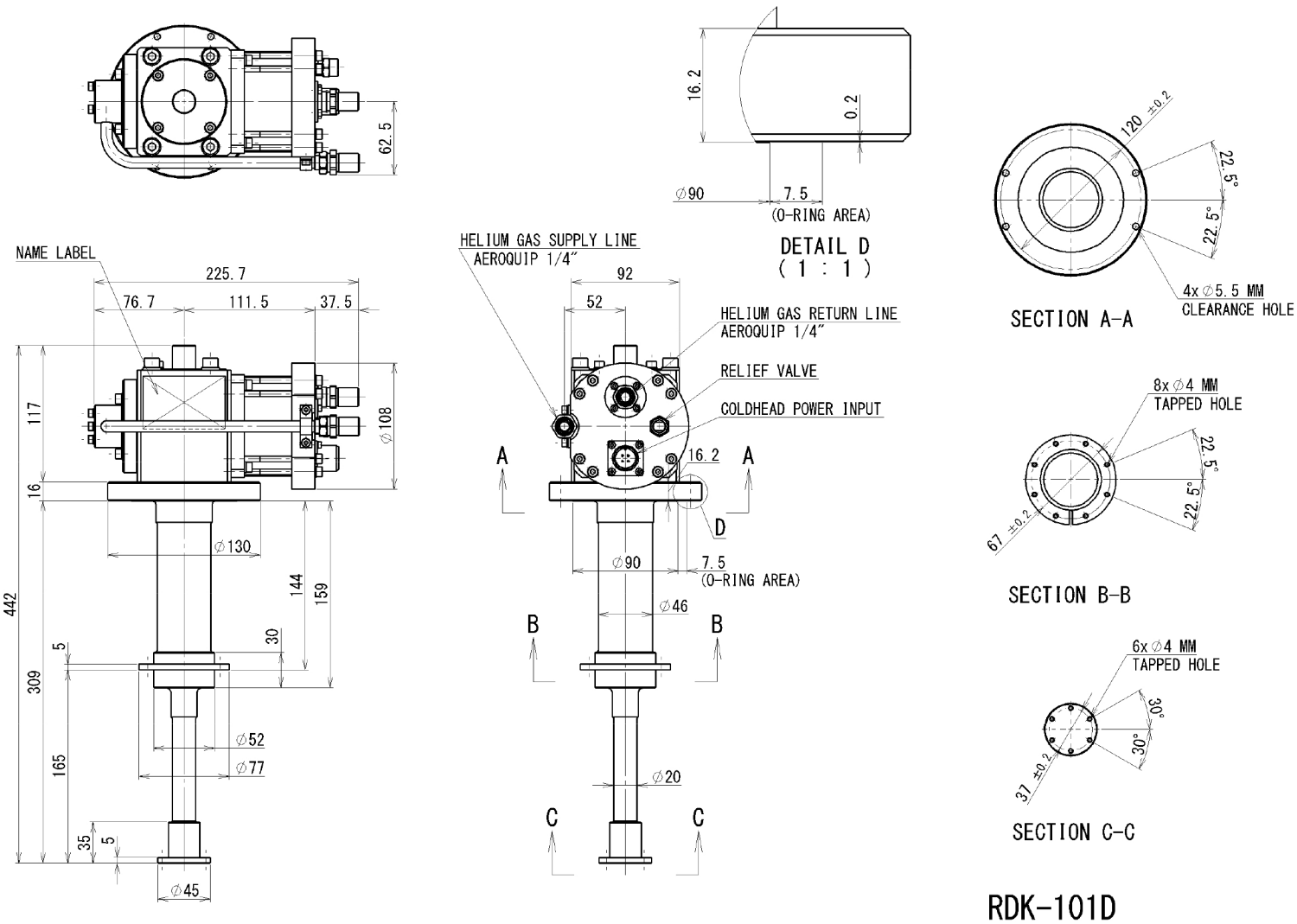

© SHI Cryogenics Group 6/19