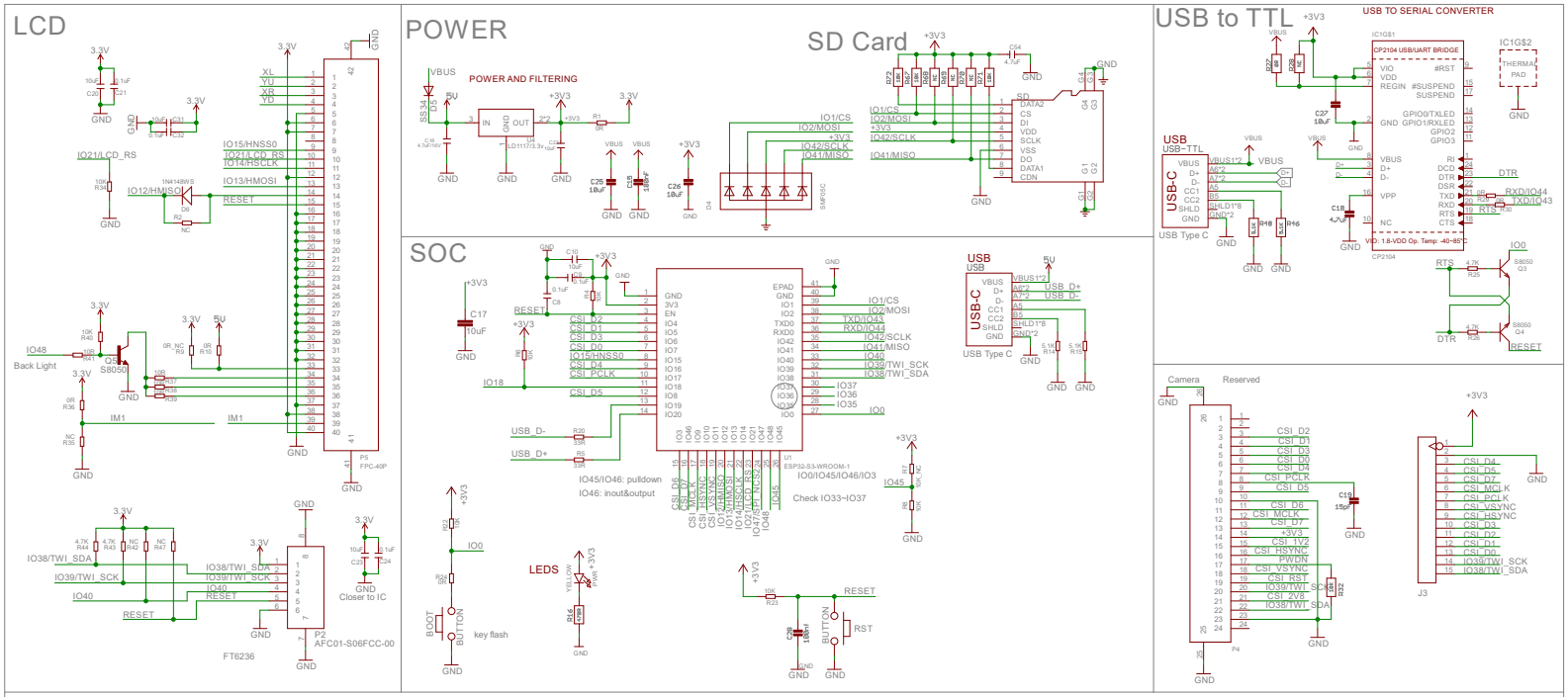
LCD
POWER
POWER AND FILTERING
SD Card
USB to TTL
USB TO SERIAL CONVERTER
SOC
Touch
LEDS
key flash
Back Light
Flash LED
Camera
Reserved
Closer to IC
FT6236
AFC01-S06FCC-00
NS2009
XPT2046
XC6206
CP2104 USB/UART BRIDGE
ESP32-S3-WROOM-1
IO45/IO46: pulldown
IO46: inout&output
IO0/IO45/IO46/IO3
Check IO33~IO37
USB Type C
ESP32-S3 TFT Touch v1.1(3.5" ili8488)
www.makerfabs.com
Design by Charlin