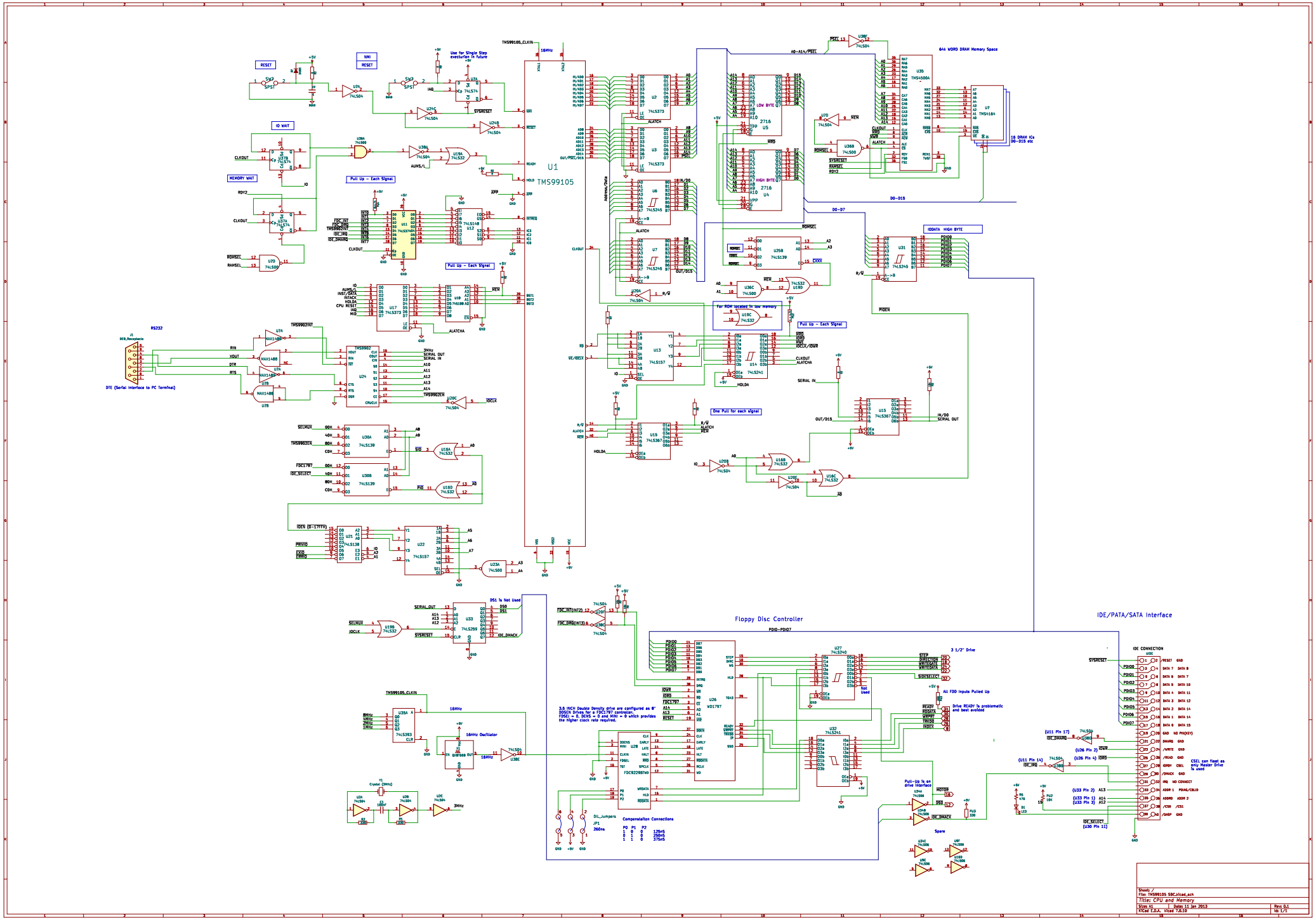
U1
TMS99105
64k WORD DRAM Memory Space
16 DRAM ICs D0-D15 etc
Floppy Disc Controller
IDE/PATA/SATA Interface
IDE CONNECTION
3 1/2" Drive
RS232
DTE (Serial Interface to PC Terminal)
Sheet: /
File: TMS99105 SBC.kicad_sch
Title: CPU and Memory
Size: A1
Date: 11 Jan 2013
Rev: 0.1
KiCad E.D.A. kicad 7.0.10
Id: 1/1