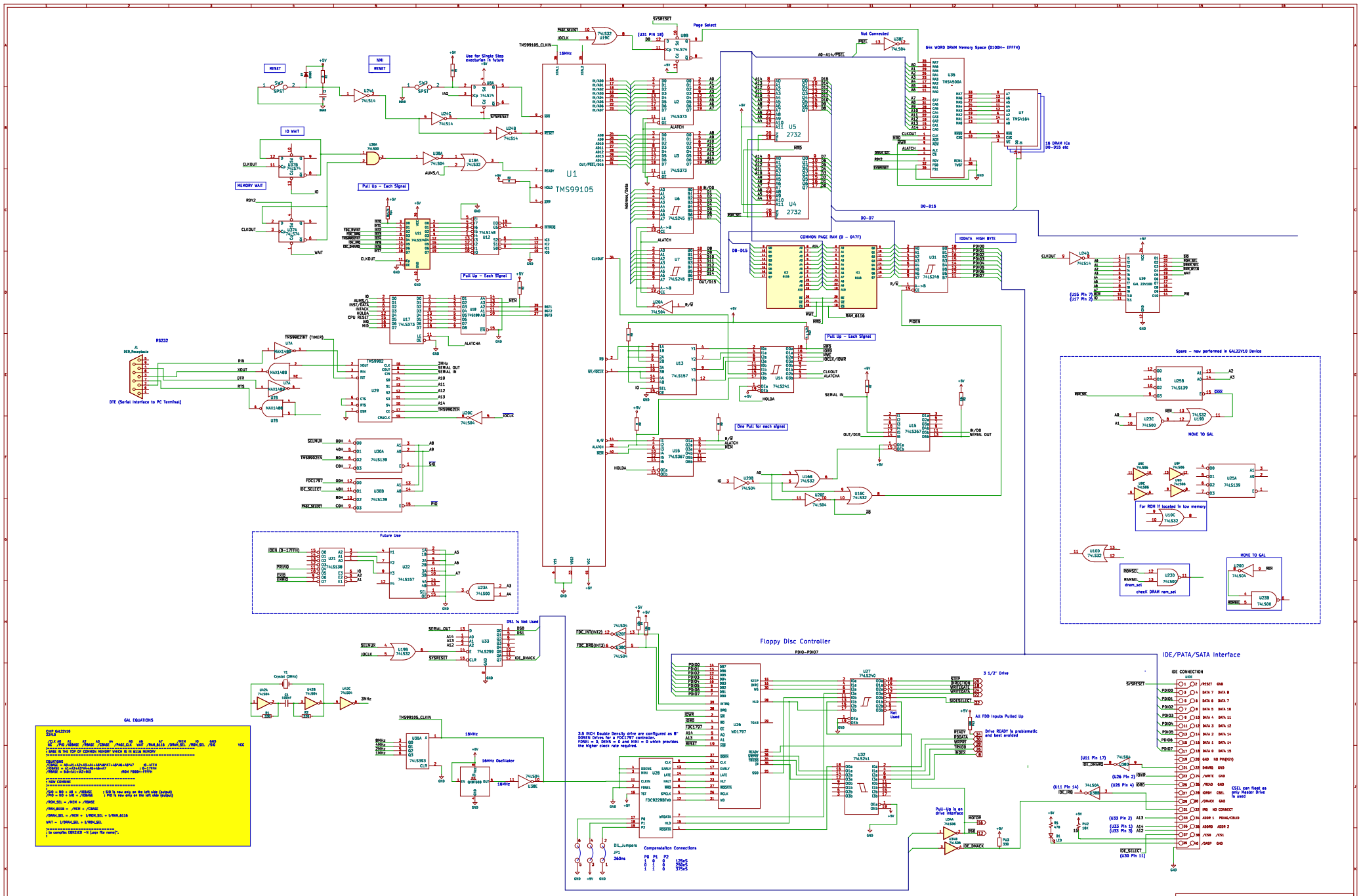
U1
TMS99105
RESET
NMI
IO WAIT
MEMORY WAIT
Pull Up - Each Signal
Use for Single Step execution in future
Page Select
Not Connected
64k WORD DRAM Memory Space (0100H- EFFFH)
16 DRAM ICs D0-D15 etc
COMMON PAGE RAM (0 - 0477)
IODATA HIGH BYTE
RS232
DTE (Serial Interface to PC Terminal)
TMS99902RT (TIMER)
Spare - now performed in GAL22V10 Device
MOVE TO GAL
For ROM if located in low memory
check DRAM ram_sel
One Pull for each signal
Future Use
Floppy Disc Controller
IDE/PATA/SATA Interface
IDE CONNECTION
3 1/2" Drive
GAL EQUATIONS
Sheet: /
File: TMS99105 SBC.kicad_sch
Title: CPU and Memory
Size: A1
Date: 11 Jan 2013
Rev: 0.1
KiCad E.D.A. kicad 7.0.10
Id: 1/1