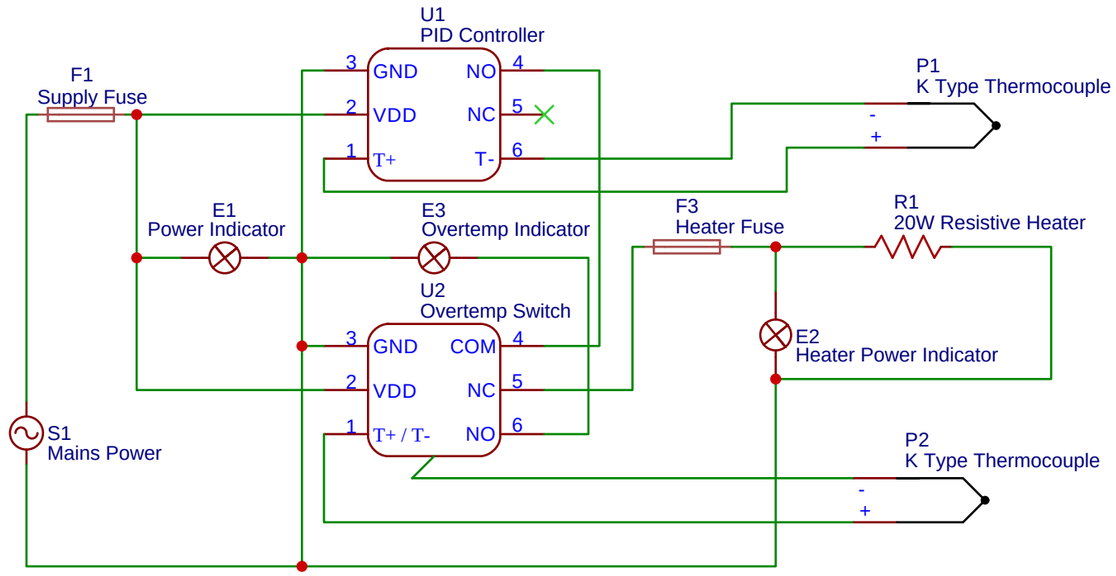

TITLE: JEOL Bakeout Controller Schematic		REV: 1.0
EasyEDA	Company: Your Company	Sheet: 1/1
	Date: 2024-12-12 Drawn By: Alexander Reisfnyder	