Cuts		
Quantity	Major Length	Cut angle
3	20	30 degrees
3	15.5	30 degrees
3	8	30 degrees

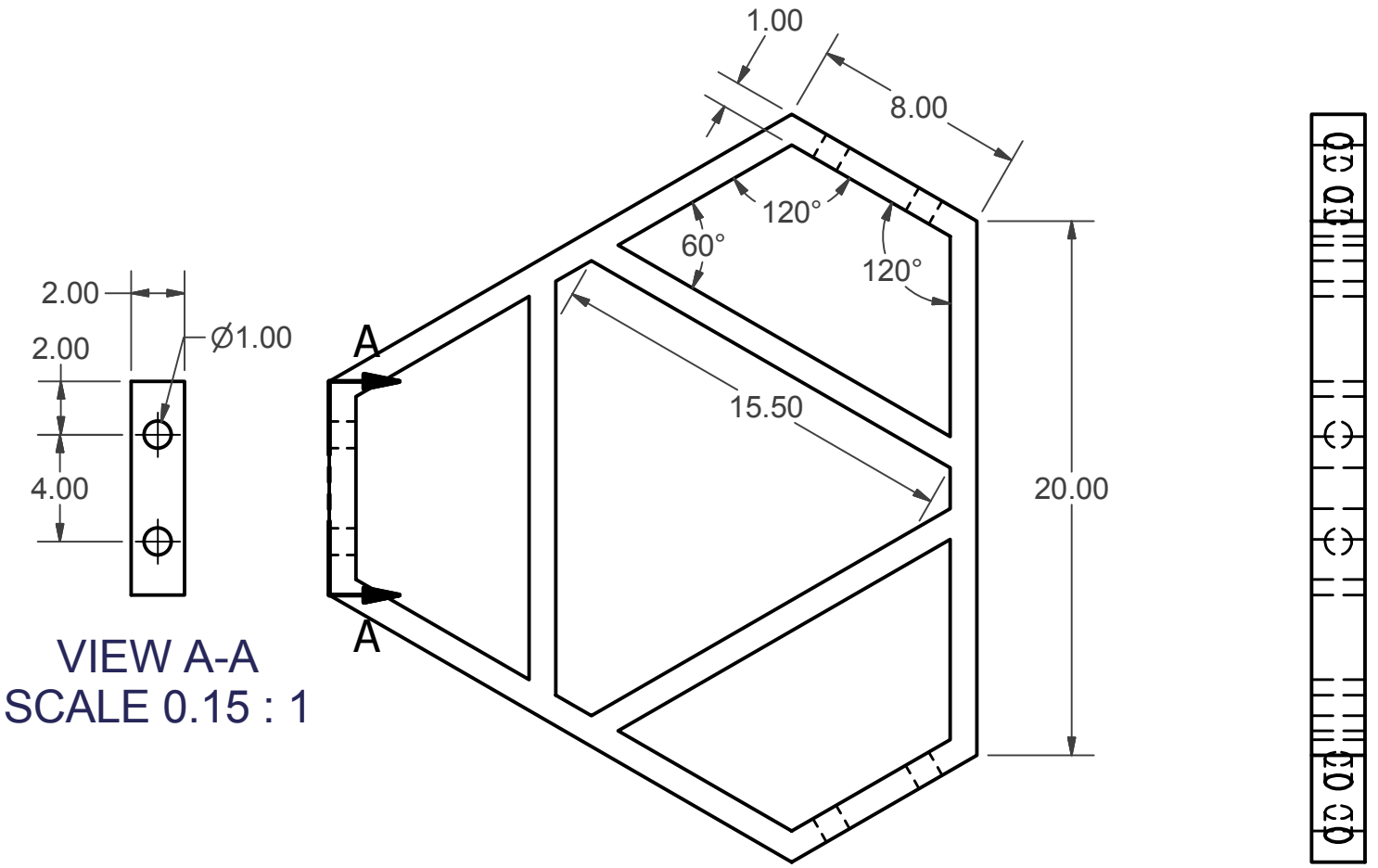

LAFAYETTE COLLEGE ENGINEERING DIVISION			DWG.#: Top_D1	REV:
	PART #: Top	QTY: 1	DRAWN BY: jonesdm	
TOLERANCE EXCEPT AS NOTED X/X ± 1/32 .X ± .02 .XX ± .01 .XXX ± .005	PART FILE: Top.ipt		SCALE: 0.15:1	Approved by:
	MATERIAL: Steel		DATE: 4/10/2016	