Lexitek LS-100 Rotary Stage

User Manual

August, 2005

Lexitek, Inc.
14 Mica Lane #6
Wellesley, MA 02481
781-431-9604
www.lexitek.com

Disclaimer and Copyright Notice

This document is copyright ©, Lexitek, Inc., 2004-2005, all rights reserved. No portion of this document may be reproduced without the express written permission of Lexitek, Inc.

Lexitek, Inc. makes no representation or warranty about the information contained in this manual. In addition, information contained herein is subject to change without notice. Every precaution has been taken in preparation of this manual. Nevertheless, Lexitek takes no responsibility for any damages which may result from errors and omissions.

The LS-100 Rotary Stage is warranted against defects in materials or workmanship for a period of 90 days. Lexitek will not be responsible for the repair or replacement of any unit damaged by user modification, negligence, abuse and mishandling, or improper installation or operation. Lexitek is not responsible for any loss or claim of special or consequential damages arising from the use of the product. This product must not be used in applications where failure could lead to physical harm or loss of life. The buyer is responsible for conducting their own testing to meet the safety regulations of the respective industry.

Products distributed by Lexitek or included in its products carry the full original manufacturer's warranty.

Lexitek reserves the right to change features and specifications without notice.

TABLE OF CONTENTS

1. LS-100 Rotary Stage Description and Theory of Operation..... 1

2. LS-100 Rotary Stage Installation and Operation..... 3

3. LS-100 Rotary Stage Maintenance and Adjustment..... 5

Appendix A Product Information Links 6

Appendix B Connector Pinouts 7

Appendix C Mounting Drawing 8

LEXITEK LS-100 ROTARY STAGE USER MANUAL

1. LS-100 Rotary Stage Description and Theory of Operation

The Lexitek LS-100 Rotary Stage is a motorized rotary stage capable of precise operation. The stage is pictured in Figure 1.

Figure 1 Image of the Lexitek LS-100 Rotary Stage, shown with 3609Z pancake motor and optional encoder.

The stage is designed for positioning and movement of optical components up to 4" in diameter. It has a 0.5" thick aluminum base plate with 9"x6" footprint and several mounting holes at the corners and along the edges. It has a low profile, <1.5" thick along the rotation or z axis.

The optic holder rotates on a slim, precision steel ball bearing with 4-point contact on each ball. Thus, the optic supports radial and thrust loading, and the stage can be mounted at any angle. The bearing can support hundreds of pounds of radial and thrust load, though components retaining the bearing may not support heavy loading.

A slim stepper motor with 4 oz-in of torque is mounted to the base plate. The motor and optic holder each have geared pulleys that are connected with a drive belt consisting of molded polyurethane around stranded steel cables. The gear ratio is 6:1. Alternatively, the stage can be supplied with a larger motor with 45 oz-in of torque for higher speed applications.

A compact driver is supplied for the stepper motor, shown in Figure 1 mounted to the base plate. The driver is capable of 1X, 2X, 4X, and 8X microstepping. It has step, direction, and disable logic inputs.

A shaft encoder is optionally mounted to the opposite end of the motor shaft. Incremental quadrature encoders are available with 32-2048 cycles per motor revolution, or up to 8192 pulses per revolution. The shaft encoder adds some thickness to the stage. Each stage also has a home switch consisting of an optical sensor and interrupter. The stage can either be used with open loop stepper control or closed loop control using an encoder.

The driver, encoder, and home switch use logic signals that generate or receive TTL signals and can be adapted to other low-voltage signals. Some interfacing details are given in the next section. Additional information is available using links in the appendix, as are electrical ratings and specifications of the motor driver, encoder, and home switch.

The bearing is rated up to 600 rpm. Lexitek warrants the stage up to 10 rpm or 60º/s, though it may perform acceptably significantly faster. With the larger 4118S motor, the stage is warranted to run at 100 rpm or 600º/s, though it may perform acceptably significantly faster.

2. LS-100 Rotary Stage Installation and Operation

The LS-100 Rotary Stage is ready for operation after the following steps are performed:

Mounting

The LS-100 Rotary Stage should be securely mounted before operation. A set of holes, either tapped or thru, for ¼-20 screws are arranged at the corners and edges of the base plate. Some of the holes are covered by the motor mount and driver, but may be accessible from the back side of the base plate. The base plate mounting dimensions are shown in Appendix C.

The optic is secured both radially, by a nylon-tipped setscrew, and axially, by black acetal clips. The setscrew is accessed as follows. With the motor unpowered, rotate the optic holder so the setscrew is accessible thru the hole in the base plate side with a 0.050" driver. The setscrew is opposite the two plastic dowel pins. The four black acetal clips are bolted to the inner bearing retaining ring. They can be shimmed or trimmed in height, as necessary.

One version of the LS-100 stage uses a separate Mounting Ring for holding the optic and interchanging different optics in a repeatable fashion. That mounting ring is bolted to the optic holder through the inner bearing retaining ring and has an integral interrupter for the optical home switch. The black acetal interrupter and clips must be removed before this mounting ring can be installed. This version of the LS-100 stage also includes a silicone rubber gasket to accommodate a limited range of thicknesses of the optic.

Operation

Basic operation of the stage requires power for the motor and the logic/opto supply, as well as a pulse generator with TTL output. In order to run the stage, the following connections must be made to the R208 driver:

Pin	Signal
1	Power (12-24V DC)
5	Direction (Logic signal)
6	Power ground
7	Logic ground
8	Logic/opto supply (5-24V DC)
9	Step (Logic signal/pulse train, 25 kHz max)

Optional signals on the motor driver include

2	SR1 (microstepping control)
3	SR2 (microstepping control)
4	Disable

Note that Pins 2-5 and 9 are optically isolated logic signals with a maximum recommended current of 7 mA. A resistor must be included in series with these signals if the opto supply is greater than 5V. The resistor values are shown in the table:

V	R
5	0
10	750
15	1500
20	2200
24	2800

With pins 2-4 left open, the driver operates at 8X microstepping and is enabled. The driver has an adjustable current limit factory set for the 0.25A rating of the motor. After the motor step pulses stop, the driver drops the hold current to a preset fraction of the maximum current to reduce motor heating. The hold current is factory set to 0.23X the maximum current.

The home switch consists of an optical sensor and an interrupter that is mounted to the optic holder. With a pullup resistor on the output, the sensor output is high when the slot is clear. When the interrupter passes through the sensor slot, the output goes low.

An encoder is optionally supplied mounted to the motor shaft. Encoders are available with 32-2048 cycles per revolution and can generate up to 8192 pulses per revolution. The encoder has TTL outputs and accessories are available that can convert the output to differential TTL or higher voltage.

Complex motions requires a motion controller that interfaces to the motor driver, home switch, and optional encoder. Lexitek offers a basic controller for these stages that can run the stage in open or closed loop. All connector pinouts are listed in the appendix.

3. LS-100 Rotary Stage Maintenance and Adjustment

The LS-100 Rotary Stage is shipped with the drive belt properly tensioned. Belt tension should not exceed 10 lbs. More tension reduces any backlash in the system but may cause the drive to bind and the motor to stall at higher speeds. To adjust the tension, loosen the 4 screws holding the motor mount, reposition it towards or away from the optic, and re-tighten the screws. Proper tension has some (but not maximum) fingertip pressure holding the motor away from the optic. If the belt is removed and replaced, take care to slide the motor mount all the way towards the optic so the belt slips off. Stretching the belt over the pulleys will damage the belt.

The LS-100 Rotary Stage Stage is shipped with the bearings lubricated with Mobil SHC-100 lithium-complex grease. The bearing is shielded from dust by the bearing retaining rings on the top side of the baseplate and a black acetal cover on the bottom of the baseplate. Should the bearing lubrication need renewing, these covering pieces need to be removed for access. The bearings should gently lift out of the baseplate and grease can be applied with a syringe. Upon replacement, the bearing retainer screws are tightened to 2-5 in-lb of torque depending on the fit. ***Consult Lexitek before performing this operation as the bearing is usually shimmed in place and removing and replacing the bearing could affect the operation of the stage.***

The motor driver current limit and hold current are factory set to 0.25A and 0.23X the maximum current for the low profile pancake motor. The current limit is set to 1.4A for the 4118S motor. Instructions for adjusting these settings are given in the driver manual available at the web address in the appendix.

Appendix A Product Information Links

3609Z-14 motor	http://www.linengineering.com/our_products/3609z.htm
4118S motor	http://www.linengineering.com/our_products/4118.htm
R208 driver	http://www.linengineering.com/our_products/pdf/R208-manualweb.pdf
OPB941W51 sensor	http://www.optekinc.com/pdf/OPB930L.pdf
KA047XP0 bearing	http://www.reali-slim.com/catalog300new.html
E2 encoder	http://www.usdigital.com/products/e2/

Appendix B Connector Pinouts

Motor Driver R208
Connector DB9M

Pin	Signal	Note
1	V+	12-24V DC
2	SR1	Opto-Isolated Logic*
3	SR2	Opto-Isolated Logic*
4	DISABLE	Opto-Isolated Logic*
5	DIRECTION	Opto-Isolated Logic*
6	PWR GND	
7	LOGIC GND	
8	LOGIC/OPTO SUPPLY	5-24V DC
9	STEP	Opto-Isolated Logic*

* 7ma recommended current. If logic supply >5V, use series resistor to limit current.

Home Switch Optek OPB941W51
Connector DB9F

Pin	Signal	Note
1	ANODE/RED	5V+ thru 220Ω resistor
2	CATHODE/BLK	Ground
3	VCC/WHT	10V max
4	OUTPUT/BLU	Open collector, 35V max
5	GND/GRN	

Encoder
Connector 5 pin

Pin	Signal	Note
1	GND	
2	INDEX	Optional
3	A	
4	VCC	
5	B	

Appendix C Mounting Drawing

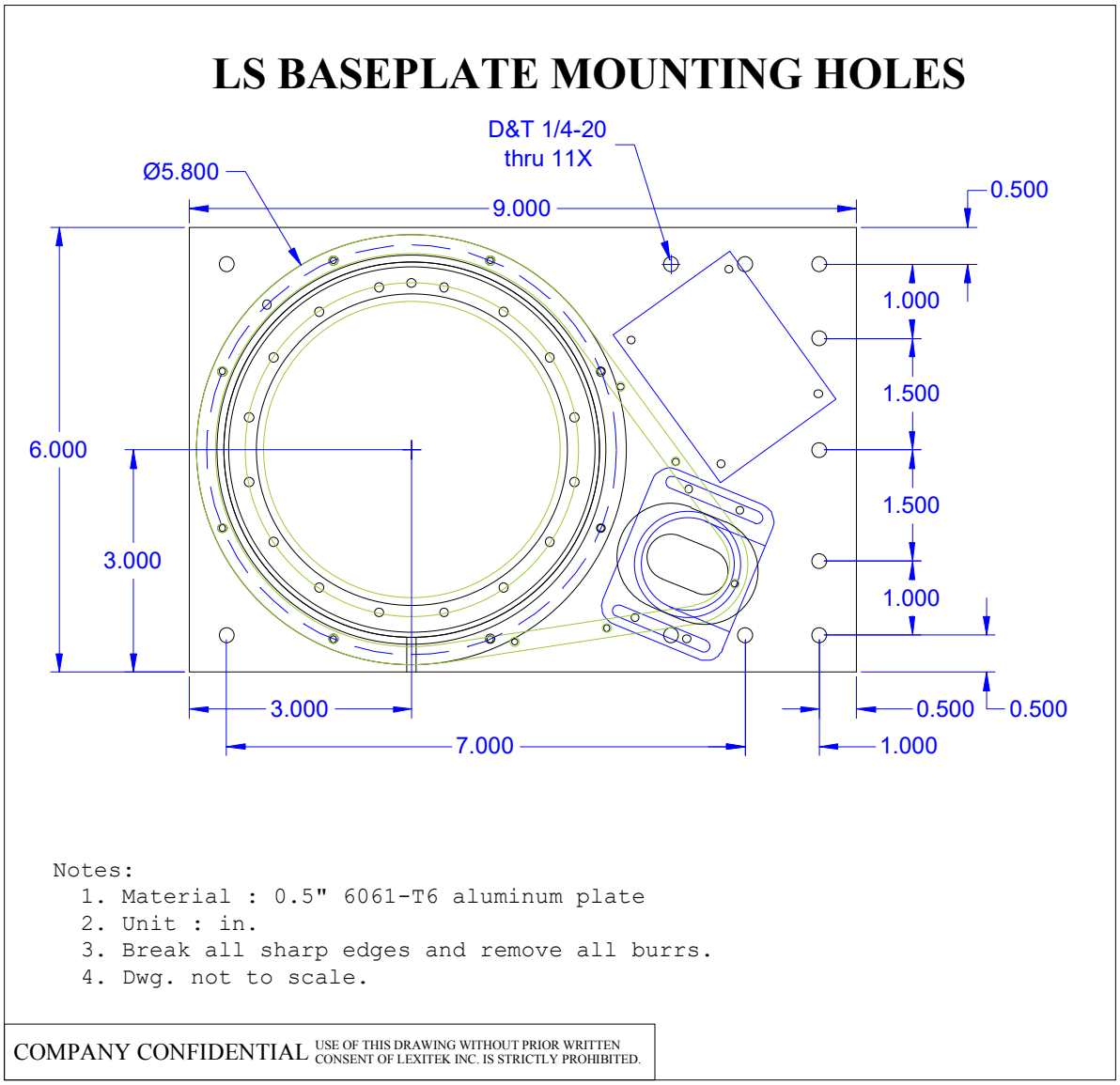

The chain guard, shown in green, projects 0.45” below the bottom of the aluminum baseplate. The motor driver (upper right blue rectangle) and the motor (lower right rounded blue rectangle) are mounted to the top surface of the plate. The motor driver, , which can be mounted elsewhere, is 0.85” high. The motor is 0.36” high. The encoder adds 0.69” of height. The optical home switch, not shown on this drawing, projects 0.64” above the baseplate.

LS-100 stages with an intermediate speed drive have a 0.25” motor mount with slightly larger footprint than the 0.36” high motor shown on the drawing and a 1.34” high motor.