Journal of Physics: Conference Series

PAPER • **OPEN ACCESS**

Performance comparison among VGG16, InceptionV3, and resnet on galaxy morphology classification

To cite this article: Yumeng Qian 2023 *J. Phys.: Conf. Ser.* **2580** 012009

View the article online for updates and enhancements.

You may also like

- Diagnosis of rectal cancer based on the Xception-MS network
Sanli Yi, Yanrong Wei, Xiaomao Luo et al.
- Detection of passageways in natural foliage using biomimetic sonar
Ruihao Wang, Yimeng Liu and Rolf Müller
- A deep convolutional neural network model for hand gesture recognition in 2D near-infrared images
Celal Can, Yasin Kaya and Fatih Klç

This content was downloaded from IP address 168.151.246.189 on 15/09/2023 at 13:52

Performance comparison among VGG16, InceptionV3, and resnet on galaxy morphology classification

Yumeng Qian
Software School, School of Informatics, Xiamen University, Xiamen 361102, China

Corresponding author email: 22920202202912@stu.xmu.edu.cn

Abstract. This article introduces the structures of three classical convolutional neural networks: VGG16, InceptionV3, and ResNet50, and compares their performance on galaxy morphology classification. The different structures of these networks give them some distinct features, leading to different results. The dataset used was Galaxy10 DECals created by the Galaxy Zoo project. The models were compared in the same way, using one fully-connected layer only without modifying its original architecture, evaluated by accuracy, precision, recall rate, and f1 score. The experimental results show that InceptionV3 gave the best classification results from all aspects. The inception module performs well on the galaxy morphology classification problem.

Keywords: Convolutional Neural Network, Galaxy Morphology Classification, VGG16, InceptionV3, ResNet50.

1. Introduction

A critical part of modern astrophysics is galaxy formation and evolution. Galaxy morphology is the most remarkable feature to characterize its structural properties. Although no two galaxies are of the same shape, some of them still share some common features that allow researchers to classify them. The oldest way of classifying different galaxies is Hubble classification [1]. Based on naked-eye observations, the scheme simply classifies galaxies into three categories: ellipticals, spirals, and irregulars. The classification scheme is developed and refined, and various complicated mathematical measurements are introduced. For instance, the widely used term CAS volume [2] and the Gini-M20 [3] space. Three separately calculated galaxy structural parameters, concentration, asymmetry, and clumpiness are known as CAS. The Gini-M20 method separates mergers from noninteracting galaxies [4].

Computer vision is one of the hottest research fields in data science. The last decade has witnessed the rapid evolution of convolutional neural network architectures. From Le-Net to DenseNet, their performances have enhanced dramatically. In recent years, technology has been used for deeper surveys. Dieleman [5] proposed a well-performing rotation-invariant convolutional neural network architecture for the topic, but the accuracy on arm tightness was merely 70.73%. Inspired by the structure, Ting-Yun Cheng et al. [6] proposed a model with an accuracy of 99%. However, these models accept an input size of merely 50 × 50 and risk overfitting.

With the help of the Galaxy Zoo (GZ) project, the Galaxy10 DECals dataset—which consisted of about 22k of the 270k SDSS galaxy images that volunteers had classified and sorted into 10 broad classes—was made possible. The extensively annotated dataset allows the convolutional neural network to show off its prowess. Galaxy10 DECals includes 17736 colored, 256 × 256-pixel galaxy images in the g, r, and z bands that have been divided into 10 classes.

Content from this work may be used under the terms of the Creative Commons Attribution 3.0 licence. Any further distribution of this work must maintain attribution to the author(s) and the title of the work, journal citation and DOI.
Published under licence by IOP Publishing Ltd

To find out which convolutional neural network architecture performs best on galaxy morphology classification, this paper compares three classical models: VGG16, InceptionV3, and ResNet. Given the most suitable architecture found, its design principles worth to be drawn on for further study. The three models were trained on the Galaxy10 DECals dataset, using one fully connected layer only. Using accuracy, precision, recall, and f1 as benchmarks, InceptionV3 is proved to be the best among the three models.

2. Introduction of Network Architecture

To understand the principles of the 3 models, this section introduces their architecture and core framework of them.

2.1. VGG16

Because of its straightforward design and broad applicability, VGG is widely used. It is well-known for its network structure design method, which offers guidance for further study on deep neural networks. VGG16 [7] accepts a 224 × 224 RGB image as input. In order to maintain the spatial resolution after convolution, it is intended to utilize convolutional filters with a very small receptive field of 3 × 3. Both the stride and padding are set to 1. To extract features, certain convolutional layers are followed by a 5 max-pooling layer. They are carried out with stride 2 over a 2 × 2 pixel window. Each time the input passes through a pooling layer, its spatial resolution is halved. At the end of the network is 3 fully connected layers. The first two each contain 4096 channels, whereas the total channels of the third depend on the dataset. A soft-max layer, which does classification prediction, is the last layer. In the VGG16 convolutional layer architecture, ReLU serves as the activation function for each layer.

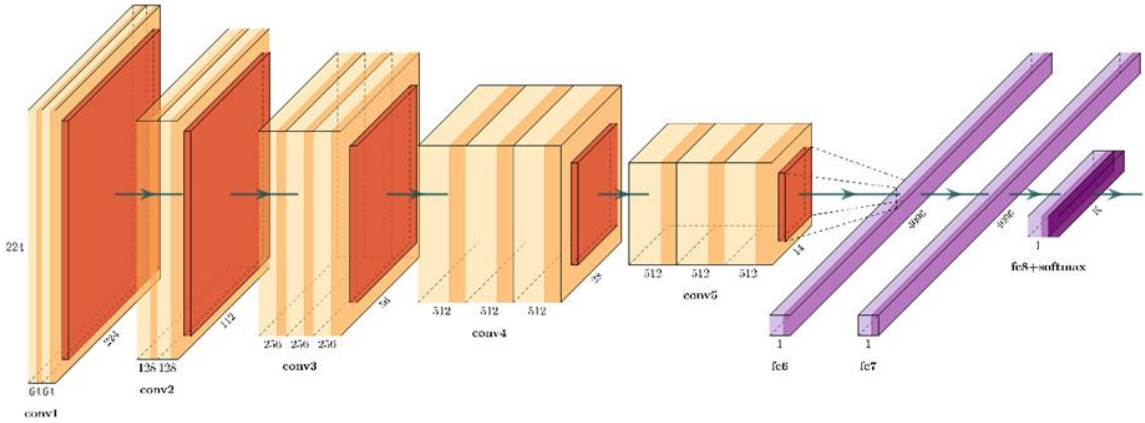

Figure 1. The architecture of VGG16.

2.2. InceptionV3

The success of VGG once inspired researchers to build very deep neural networks, and the pursuit of depth quickly became mainstream at that time. There's no denying that some of the models achieved widely recognized results in various benchmarks, not mentioned the huge cost of computational resources. In some practical application scenarios where the labeled data for training is not enough, the models tend to overfit at an early stage. In cases like mobile vision and big-data scenarios, computational efficiency and parameter amount can never be ignored.

InceptionV3 [8] aims at scaling up networks by dealing with the computation as efficiently as possible. It employs appropriately factorized convolutions and aggressive regularization. It is an improvement on Inception architecture. The model is judiciously designed on 4 major principles: representational bottlenecks in the network should be avoided, high dimensional representations are easy to process, Low dimensional embeddings can be used for spatial aggregation with no loss in representational capacity, the network's width and depth can be expanded simultaneously to achieve the

best performance for a given amount of computation. By adhering to these guidelines, Inception architecture remains distinct from conventional approaches to increase network accuracy.

By making the most of the additional computing with appropriately factorized convolutions and aggressive regularization, InceptionV3 [8] tries to scale up networks. It enhances the initial Inception module. The model is carefully constructed based on four key principles: representational bottlenecks in the network should be avoided; high-dimensional representations are simple to process; low-dimensional embeddings can be used for spatial aggregation with no loss in a representational capacity, and the network's width and depth can be expanded concurrently to achieve the best performance for a given amount of computation. By adhering to these guidelines, Inception architecture remains distinct from conventional approaches to increase network accuracy.

InceptionV1 sets the original structure of inception architecture. It featured the use of convolutional kernels of different sizes. This implies different sizes of perceptual fields, increasing the adaptability of the network to different scales. Splicing the outputs, later on, is responsible for fusing the features on a different scale. Additionally, a 1 × 1 kernel is added as part of the Inception architecture, and the final fully-connected layer is swapped out for a global average pooling layer.

InceptionV2 uses batch normalization to address internal covariate shifts. Batch normalization can accelerate network training and prevent gradient disappearance. Inception architecture gets enhanced as well since the convolutions with large filter sizes are factorized into small convolutions. Parameters are disentangled after factorizing, making the training process less time-consuming. The experiment showed that linear activation always performed worse than rectified linear units in factorization.

In InceptionV3, the designer takes the reduction of parameters a step further. It introduces asymmetric convolutions, say using the combination of an n × 1 kernel and a 1 × n kernel to substitute an n × n kernel. The former has the same effect as the latter one's, besides, this way can reduce parameters sharply. InceptionV3 removes the auxiliary classifiers which has been used in InceptionV2, arguing that the auxiliary classifiers take the same role as the regularizer, thus removing them will not negatively affect the final result of the network. Table 1 illustrates the general layout of the InceptionV3 network architecture.

Table 1. The general layout of the InceptionV3 network architecture.

	Patch Size / Stride or remarks	Input Size
conv2d(ReLU, BN)	3 × 3 / 2	229 × 229 × 3
conv2d(ReLU, BN)	3 × 3 / 1	149 × 149 × 32
conv2d(ReLU, BN, padded)	3 × 3 / 1	147 × 147 × 32
max pool	3 × 3 / 2	147 × 147 × 64
conv2d(ReLU, BN)	3 × 3 / 1	73 × 73 × 64
conv2d(ReLU, BN)	3 × 3 / 2	71 × 71 × 80
conv2d(ReLU, BN)	3 × 3 / 1	35 × 35 × 192
3 × Inception Module 1	As in Figure 3(a)	35 × 35 × 288
5 × Inception Module 2	As in Figure 3(b)	17 × 17 × 768
2 × Inception Module 3	As in Figure 3(c)	8 × 8 × 1280
max pool	8 × 8	8 × 8 × 2048
linear	logits	1 × 1 × 2048
softmax	classifier	1 × 1 × 1000

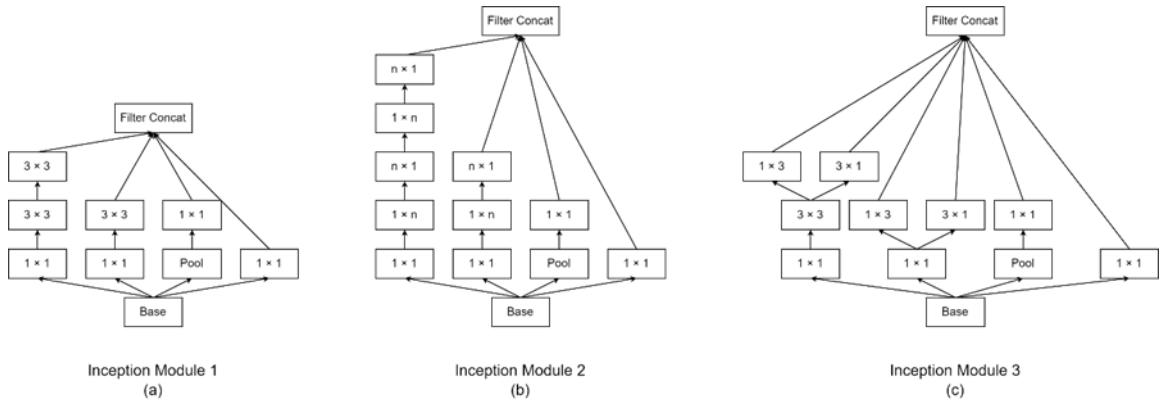

Figure 2. Inception modules. (a): Two 3 × 3 convolutions are used in place of each 5 × 5 convolution. (b): the factorization of the n × n convolutions. (c): modules with enlarged filter bank outputs.

2.3. ResNet

Currently, optimizers for neural networks are mostly based on back-propagation. Its basic idea is updating the weights of the neural network by calculating gradients of loss function from output to input. It requires the help of the chain rule, in a nutshell multiplying the previous value with the current one. As the network gets deeper, the gradient will propagate exponentially. If the gradient is less than 1, several layers later the value will be close to zero. If the gradient is larger than 1, several layers later the value may rise to infinity. The problem of gradient vanishing and gradient explosion becomes almost unavoidable. Gradient explosion can make learning unstable, hampering the network to learn from the training data. Gradient vanishing hinders the first few hidden layers from updating their weights, thus slowing down the whole training process. These issues make it more challenging to train deep neural networks.

Traditional deep neural networks simply apply normalized initialization and intermediate normalization layers to address the obstacle to converging. However, a degradation problem is encountered, i.e., stacked nonlinear layers can hardly perform as identity mappings. ResNet confirms that increasing the number of layers in a sufficiently deep model causes greater training errors. Unexpectedly, it was not caused by overfitting [9]. In fact, the deeper the network, the harder it is to optimize. Evidenced by the successful application of residual vectors in image recognition and the multigrid method, it turns out that reformulation and pre-processing make optimization much easier and much more effective.

The residual learning reformulation makes it possible for the network to approach identity mapping by setting the weights of multiple nonlinear layers as zero. Residual learning is inserted after every few stacked layers. A typical block can be briefed as:

$$y = F(x; \{W_i\}) + W_s x, \tag{1}$$

where the function $F(x; \{W_i\})$ displays the remaining mapping. Additional layers could be added to the function. The process is visualized in figure 3.

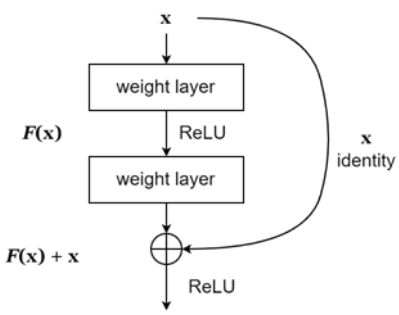

Figure 3. Residual learning: a building block. [9]

The shortcut connections introduce neither an extra parameter nor computation complexity, sharpening the contrast to a plain network.

A plain network and a residual network make up the majority of ResNet. ResNet's plain baselines are modeled after VGG. The majority of the filters in the convolutional layers are 3 × 3, striding 2, and once the size of the feature map is cut in half, filter numbers will be doubled. The network consists of 34 weighted layers, with a fully connected layer followed by softmax and a global average pooling layer at the very end. Shortcut connections are then inserted, transforming the traditional network to a residual version, as shown in figure 3. The identity shortcuts can be applied with the zero-padding operation or projection shortcut (both stride with 2) if the output dimensions outnumber the input.

ResNet50 replaces the 2-layer block in ResNet34 with a deeper 3-layer bottleneck block. By enclosing a 3 × 3 layer with two 1 × 1 layers, ResNet50 decreases the input dimensions, feeding data into the 3 × 3 layers, and then increases the dimensions. This brings a more efficient design.

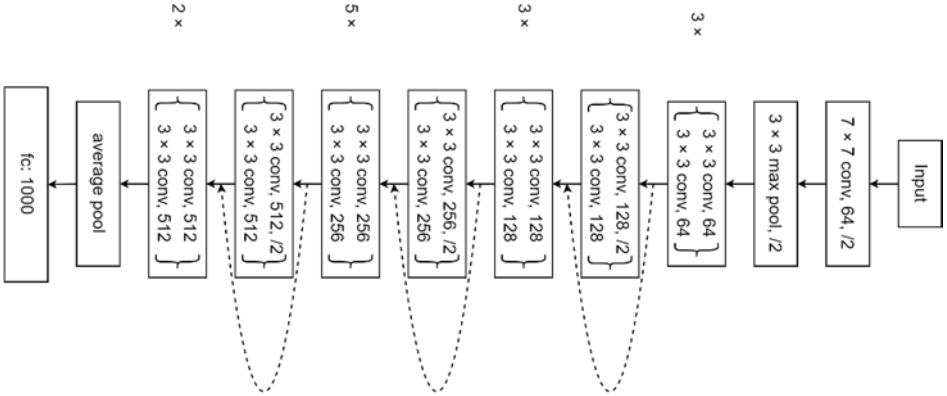

Figure 4. The architecture of ResNet34.

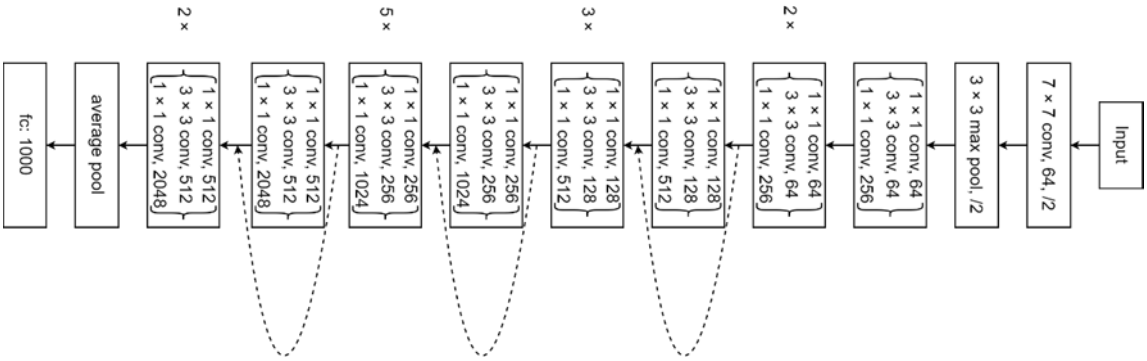

Figure 5. The architecture of ResNet50.

3. Experiments and Analysis

3.1. Experimental Settings

In this paper, we tuned the three models as follows. First, the images went through some simple data augmentation. They were randomly flipped horizontally and vertically, and rotated by 0.2 degrees. To fit the model input, images were then cut to size 224 × 224 and dealt with by each model's pre-processing function. For each model, the fully-connected layers at the top were removed. An average pooling and a dropout layer with a rate of 0.2 were inserted before we added a fully-connected layer with 10 units. In the training process, the models were optimized by Adaptive Moment estimation. Sparse Categorical Crossentropy was used as a loss function.

3.2. Results

Table 2. The results comparison.

	accuracy	recall	precision	f1
VGG16	82.75%	80.03%	81.32%	79.79%
InceptionV3	83.6%	81.26%	83.35%	81.62%
ResNet50	80.78%	76.82%	80.48%	77.67%

3.3. VGG16

The traditional VGG-16 model in Keras was employed on the dataset. The accuracy reaches 82.75%. The mean class recall is 80.03%, the mean precision is 81.32%, and the f1-score is 79.79%. VGG16 performs well on Round-smooth, Smooth, Cigar-shaped, and Edge-on with Buldge galaxies.

3.4. InceptionV3

InceptionV3 is applied on the Galaxy10 dataset as well, fine-tuned as mentioned before. The accuracy reaches 83.6%. The mean class recall is 81.26%, the mean precision is 83.35%, and 81.62% for the f1-score. InceptionV3 performs well on Round-smooth, Smooth, Cigar-shaped, and edge-on with bulge galaxies.

3.5. ResNet50

ResNet50 is also applied on the Galaxy10 dataset, fine-tuned as mentioned before. The accuracy is 80.78%. The mean class recall is 76.82%, the mean precision is 80.48%, and 77.67% for the f1-score. ResNet performs well on Round-smooth, Smooth, Cigar-shaped, and edge-on with bulge galaxies.

3.6. Discussion

Among the above three models, InceptionV3 has the highest accuracy of 83.6%. It ranks top on all the metrics adopted. And of all the categories of galaxies, round-smooth, Smooth, Cigar-shaped, and Edge-on with Buldge morphologies can be classified appropriately most by convolutional neural networks.

The most appreciated feature of VGG16 is its small convolutional kernels. Small convolutional kernels have the ability to significantly lower the number of parameters, improving the effectiveness of training and testing. For instance, the effect of two 3 × 3 convolutional layers is equivalent to a 5 × 5 convolutional layer while fewer parameters are required. Since the convolutional kernel is smaller, it is possible to stack more convolutional layers to increase the network's depth, which is advantageous for image classification tasks. The increased non-linear rectification layers make the decision function more discriminative.

Another major improvement to AlexNet is that the authors find the role of LRN in deep networks not obvious, thus they simply remove it. The success of the VGG model demonstrates that learning feature patterns in images can be improved by deepening the network.

However, compared with other CNN models, VGG16 is computationally demanding in terms of memory and time. The number of parameters of VGG16 is about 138M, and most of them are concentrated in the last 3 fully connected layers. The fully connected layers are not only linear but also prone to overfitting, thus hampering the generalization ability of the overall network.[10] According to some articles, these fully-connected layers don't even affect performance if they are eliminated, drastically lowering the number of parameters and training costs.

The total parameters of InceptionV3 are about 25 million, in sharp contrast to the 1.4 billion parameters of VGG16. High performance with low cost allows it to be ported to common servers to provide fast response services or even be ported to cell phones for real-time image recognition. However, tuning Inception's architecture is challenging because of its intricacy. The task of deepening the network is not simple. The architecture can hardly maintain its remarkable computational efficiency if it is simply scaled up.

The introduction of the residual vector gives the model a more flexible architecture, allowing it to judge whether doing more convolutions is a sensible choice. But the connection is limited, one layer can

only connect to its directly subsequent layer. In addition, the summation operation of combining the identity function and outputs can impede the information flow in the network [11].

4. Conclusion

AlexNet model produces excellent results by constructing multilayer networks. VGG model expands the convolutional network of fewer than ten layers of AlexNet to about twenty layers, increasing the nonlinear capacity of the network. To achieve this, very small (3 × 3) convolution filters are applied to all layers.

Compared with other convolutional neural network models, the Inception network's most striking feature is its expansion of the convolutional operation between layers in the network. The sparsely connected architecture essentially improves network performance. The convolutional kernels of different sizes translate to perceptual fields of different sizes, which are later on concatenated.

ResNet creatively uses a deep residual learning architecture to handle the degradation issue. According to the author, optimizing residual mapping is simpler for stacked nonlinear layers than optimizing the original one. Feedforward neural networks with shortcut connections are capable of realizing the residual mapping. The outputs of the stacked layers are combined with shortcut connections, neither adding additional parameters nor increasing computational complexity. Experimental results on the Galaxy-10 Dataset show that, in the galaxy morphology classification area, InceptionV3 works best on all benchmarks.

References

[1] Hubble E P 1926 *Extragalactic Nebulae* (The Astrophysical Journal) pp 321 – 369
[2] Conselice Christopher J 2003 *The Relationship between Stellar Light Distributions of Galaxies and Their Formation Histories.* (The Astrophysical Journal Supplement Series 147) pp 1 – 28.
[3] Lotz, Jennifer M 2003 *A New Nonparametric Approach to Galaxy Morphological Classification.* (The Astronomical Journal 128) pp 163 – 182.
[4] Milena Pawlik 2014 *Quantifying galaxy morphology* (Astronomy & Geophysics vol 55) pp 6.13 – 6.16
[5] Dieleman S Willett K W Dambre J 2015 *Rotation-invariant convolutional neural networks for galaxy morphology prediction* (Monthly Notices of the Royal Astronomical Society vol 450) pp 1441 – 1459
[6] Ting-Yun C Conselice and Christopher J 2021 *Galaxy morphological classification catalog of the Dark Energy Survey Year 3 data with convolutional neural networks.* (Monthly Notices of the Royal Astronomical Society vol 507) pp 4425 – 4444.
[7] Simonyan K and Zisserman A 2014 Very deep convolutional networks for large-scale image recognition *Preprint* arXiv:1409.1556
[8] Szegedy C, Vanhoucke V, Ioffe S, Shlens J, Wojna Z 2016 *Rethinking the inception architecture for computer vision*. (IEEE conference on computer vision and pattern recognition) pp 2818 – 2826
[9] He K, Zhang X, Ren S and Sun J 2016 *Deep residual learning for image recognition*. (IEEE conference on computer vision and pattern recognition) pp 770 – 778
[10] Min L Qiang C and Shuicheng Y 2014 *Network in network* (IEEE International Conference on Learning Representations)
[11] Huang G Liu Z L. Van Der Maaten and K Q Weinberger 2017 *Densely Connected Convolutional Networks* (IEEE conference on computer vision and pattern recognition) pp 2261 – 2269