Comparative EIS Kinetics Report

Model Structure: `R0-p(R1,CPE1)`

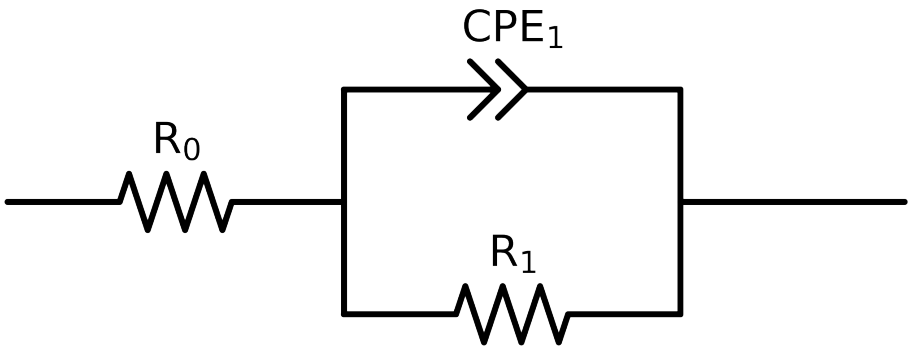

Element	Unit	Bounds	Cauvel_1_MBT_1H	Cauvel_1_MBT_4H	Cauvel_1_MBT_8H
R_0	Ω	$[1.0e-03, 1.0e+03]$	$8.04e+01 \pm 9.9e-01$	$7.58e+01 \pm 4.9e-01$	$7.41e+01 \pm 5.4e-01$
R_1	Ω	$[1.0e+00, 1.0e+08]$	$3.31e+05 \pm 9.2e+03$	$5.32e+05 \pm 6.7e+03$	$7.17e+05 \pm 1.2e+04$
Q_1	Ω^{-1} $\sec^a$	$[1.0e-11, 1.0e-03]$	$5.81e-06 \pm 8.9e-08$	$6.80e-06 \pm 4.8e-08$	$7.16e-06 \pm 5.4e-08$
n_1	-	$[5.0e-01, 1.0e+00]$	$9.36e-01 \pm 3.2e-03$	$9.12e-01 \pm 1.5e-03$	$9.02e-01 \pm 1.6e-03$
χ^2	-	-	$3.266e-03$	$8.822e-04$	$1.105e-03$

Analysis Results: 1H

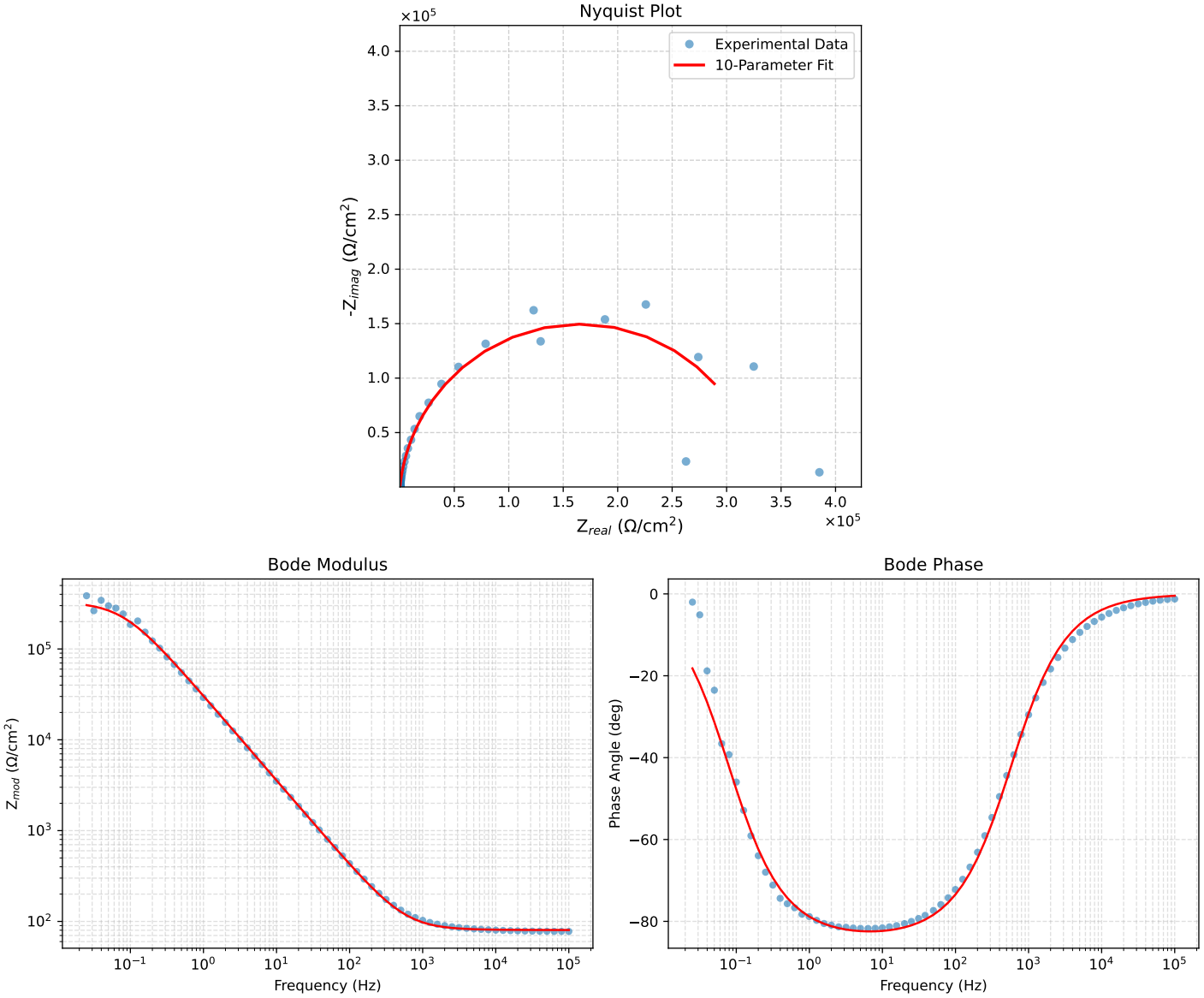

Figure 1: EIS Fit Results for Cauvel_1_MBT_1H

Analysis Results: 4H

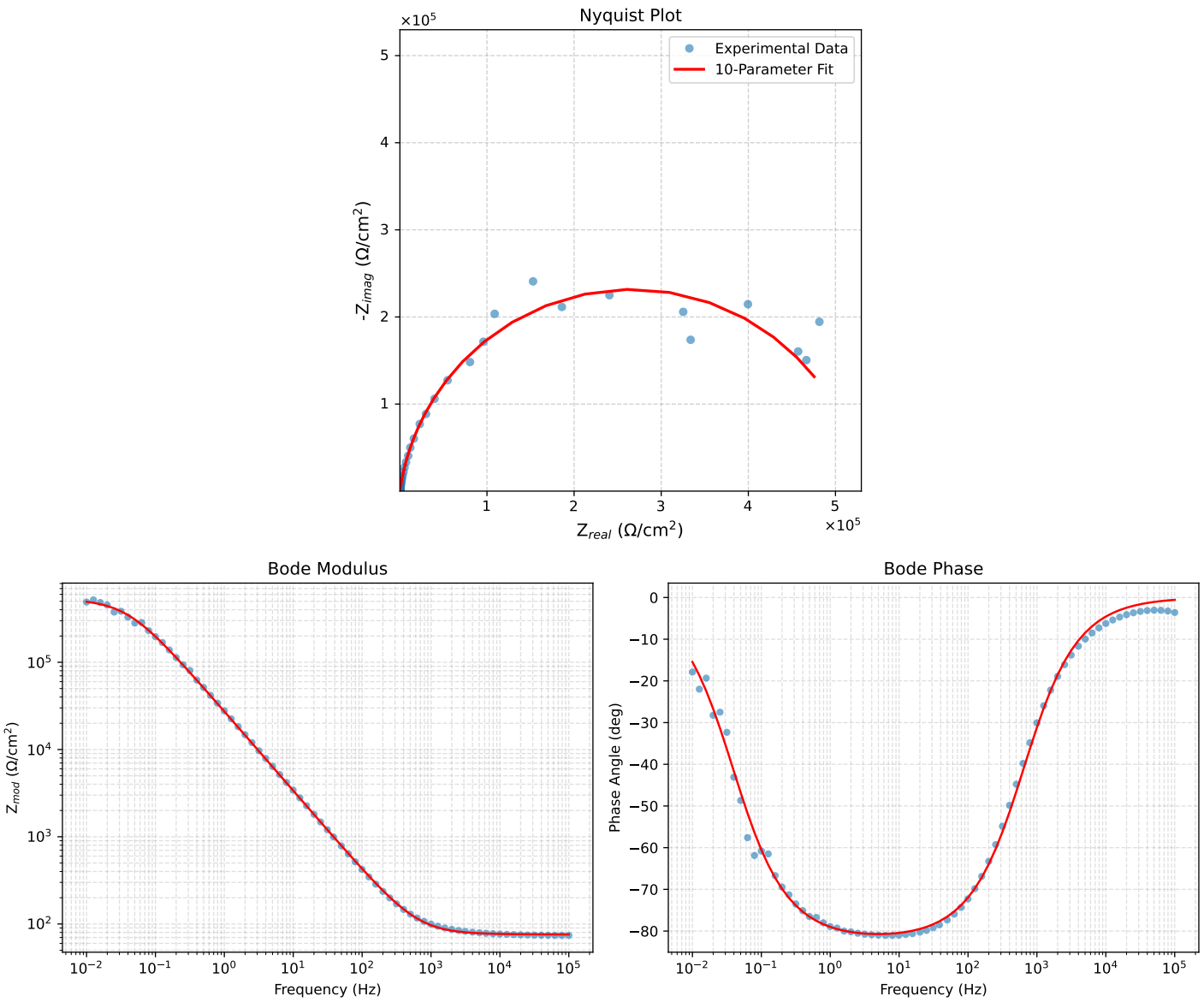

Figure 2: EIS Fit Results for Cauvel_1_MBT_4H

Analysis Results: 8H

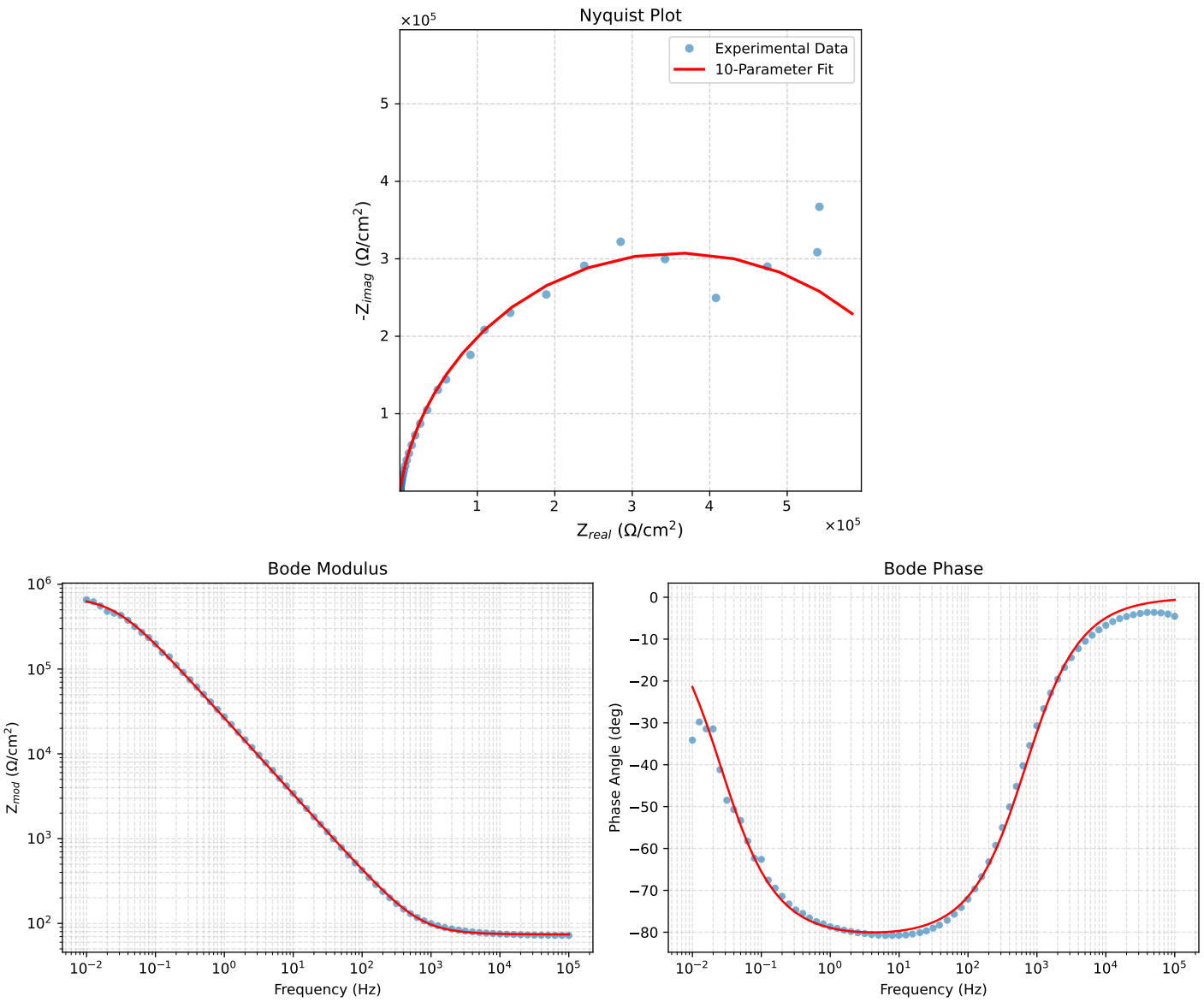

Figure 3: EIS Fit Results for Cauvel_1_MBT_8H