Comparative EIS Kinetics Report

Model Structure: `R0-p(R1-p(R2,CPE2),CPE1)`

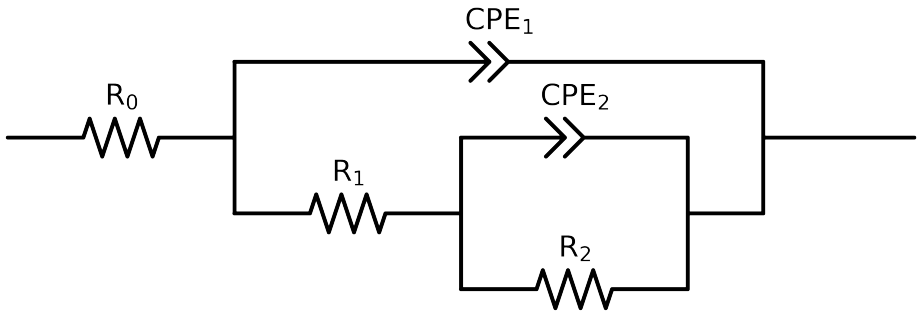

Element	Unit	Bounds	Cauvel_4_NaCl_8H	Cauvel_4_NaCl_24H	Cauvel_4_NaCl_48H	Cauvel_4_NaCl_72H	Cauvel_4_NaCl_168H
R_0	Ω	$[1.0e-03, 1.0e+03]$	$7.56e+01 \pm 7.5e-01$	$7.23e+01 \pm 3.2e-01$	$7.06e+01 \pm 3.2e-01$	$5.48e+00 \pm 3.7e+03$	$5.36e+01 \pm 2.7e-01$
R_1	Ω	$[1.0e+00, 1.0e+08]$	$1.42e+01 \pm 6.1e+03$	$3.91e+03 \pm 9.5e+02$	$3.80e+03 \pm 5.3e+02$	$5.82e+01 \pm 3.7e+03$	$4.21e+03 \pm 2.8e+02$
R_2	Ω	$[1.0e+00, 1.0e+08]$	$2.41e+04 \pm 6.3e+03$	$2.91e+04 \pm 4.2e+03$	$2.90e+04 \pm 3.1e+03$	$2.17e+04 \pm 1.0e+03$	$1.50e+04 \pm 1.2e+03$
Q_2	Ω^{-1} sec^a	$[1.0e-11, 1.0e-03]$	$8.03e-05 \pm 5.2e-05$	$1.39e-04 \pm 1.5e-05$	$1.78e-04 \pm 1.2e-05$	$2.03e-04 \pm 4.2e-06$	$3.94e-04 \pm 3.1e-05$
n_2	-	$[5.0e-01, 1.0e+00]$	$5.00e-01 \pm 4.5e-02$	$5.00e-01 \pm 4.5e-02$	$5.82e-01 \pm 3.5e-02$	$7.44e-01 \pm 6.2e-03$	$7.72e-01 \pm 3.6e-02$
Q_1	Ω^{-1} sec^a	$[1.0e-11, 1.0e-03]$	$5.03e-05 \pm 3.0e-05$	$9.94e-05 \pm 3.8e-06$	$1.06e-04 \pm 3.4e-06$	$1.79e-09 \pm 1.1e-07$	$1.60e-04 \pm 3.5e-06$
n_1	-	$[5.0e-01, 1.0e+00]$	$8.97e-01 \pm 1.3e-01$	$8.35e-01 \pm 6.9e-03$	$8.57e-01 \pm 6.3e-03$	$9.06e-01 \pm 5.4e+00$	$8.60e-01 \pm 5.0e-03$
χ^2	-	-	$8.056e-04$	$4.777e-04$	$5.433e-04$	$5.893e-03$	$7.207e-04$

Analysis Results: 8H

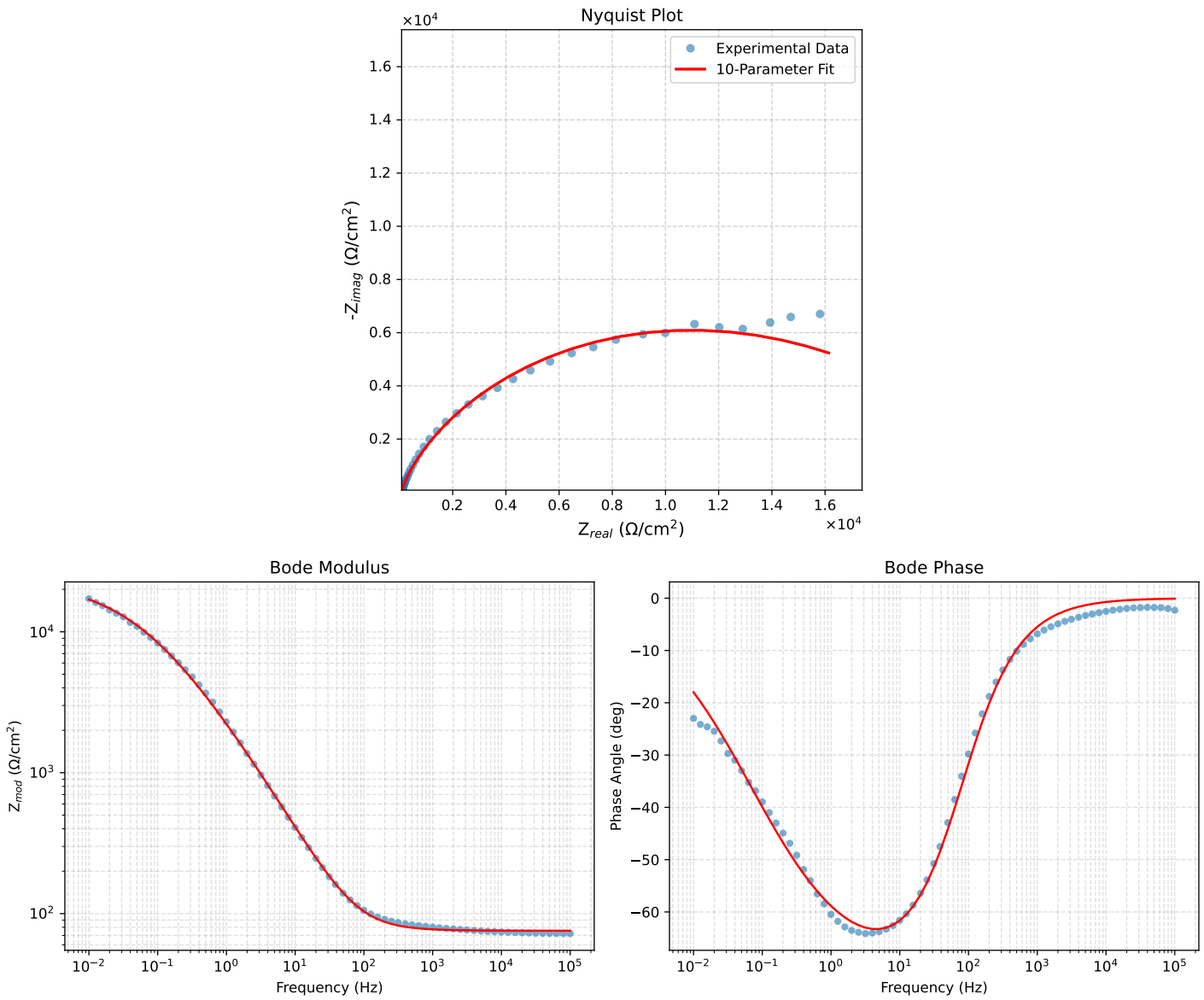

Figure 1: EIS Fit Results for Cauvel_4_NaCl_8H

Analysis Results: 24H

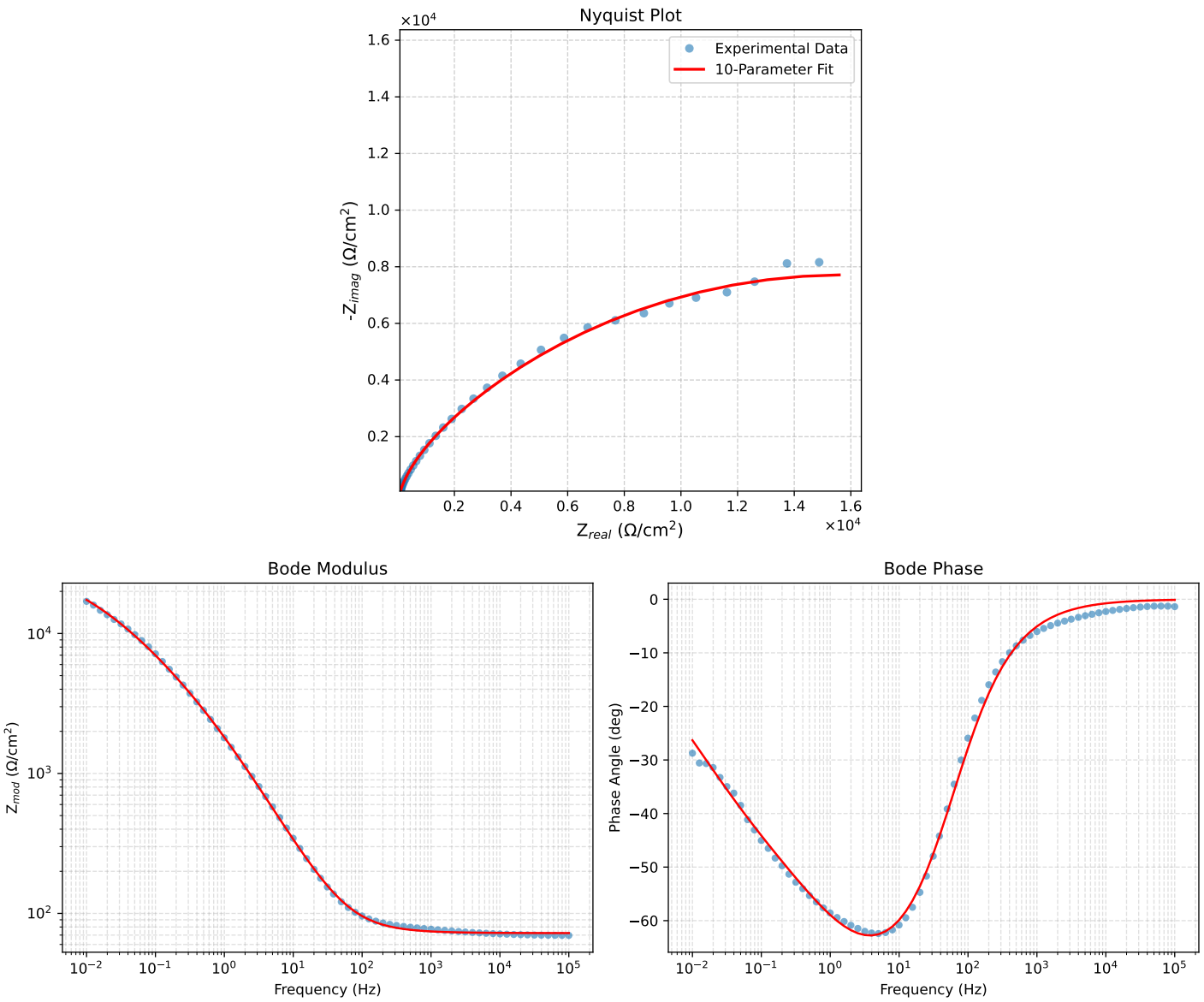

Figure 2: EIS Fit Results for Cauvel_4_NaCl_24H

Analysis Results: 48H

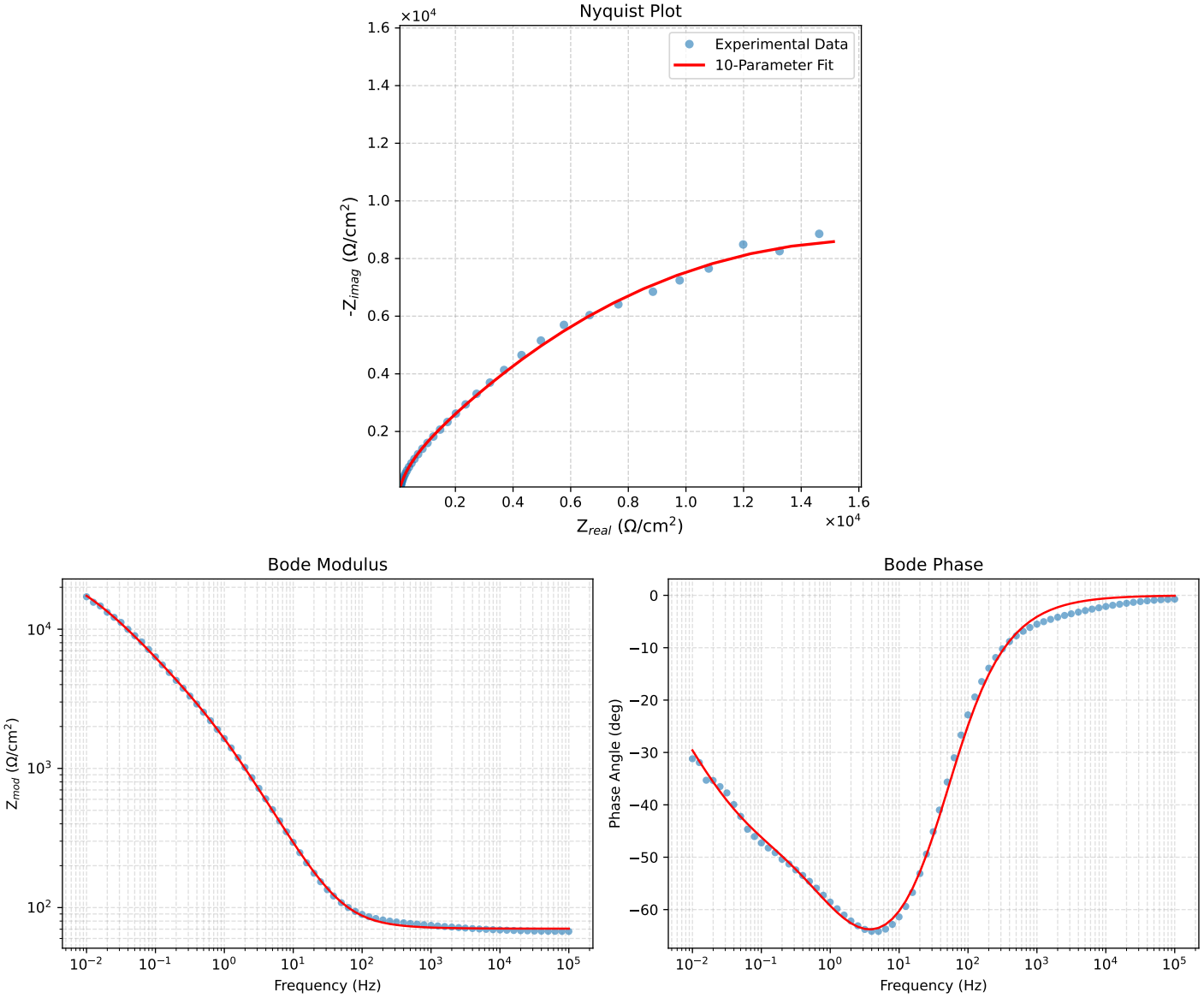

Figure 3: EIS Fit Results for Cauvel_4_NaCl_48H

Analysis Results: 72H

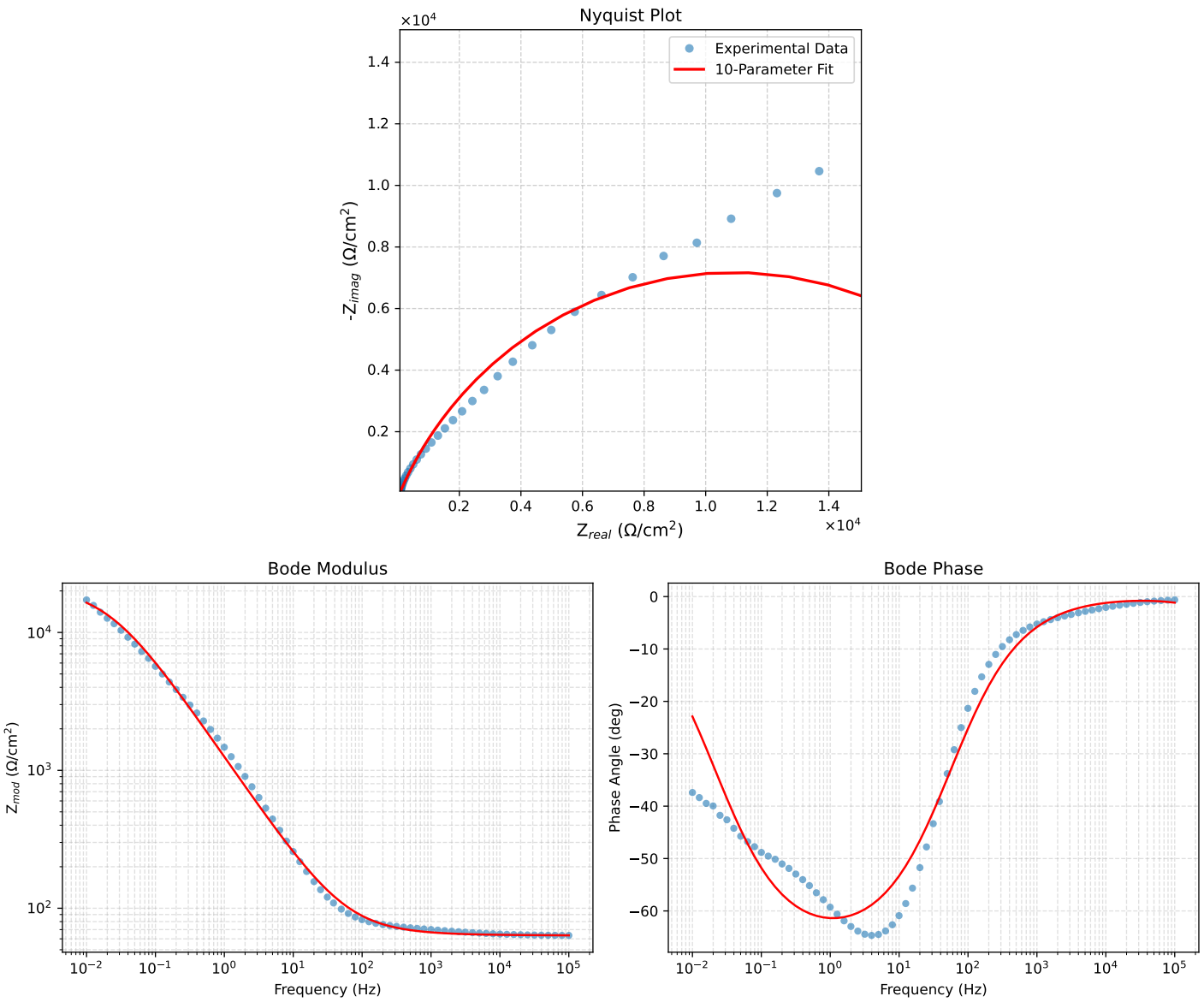

Figure 4: EIS Fit Results for Cauvel_4_NaCl_72H

Analysis Results: 168H

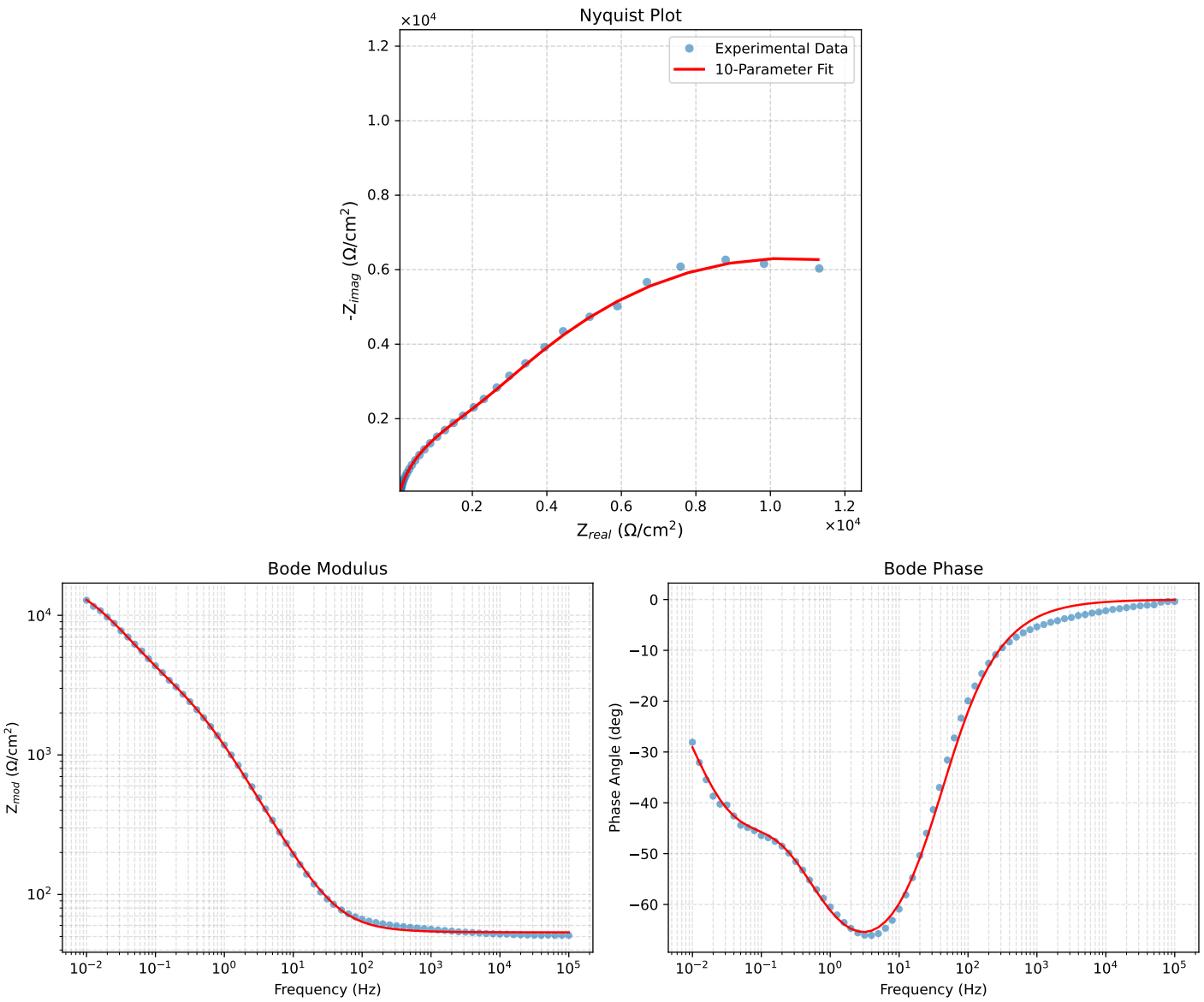

Figure 5: EIS Fit Results for Cauvel_4_NaCl_168H