Comparative EIS Kinetics Report

Model Structure: `R0-p(R1-p(R2,CPE2),CPE1)`
Used data: altered data, first 0 points removed and points with $freq > 1e+04$ and $freq < 1e-01$ removed

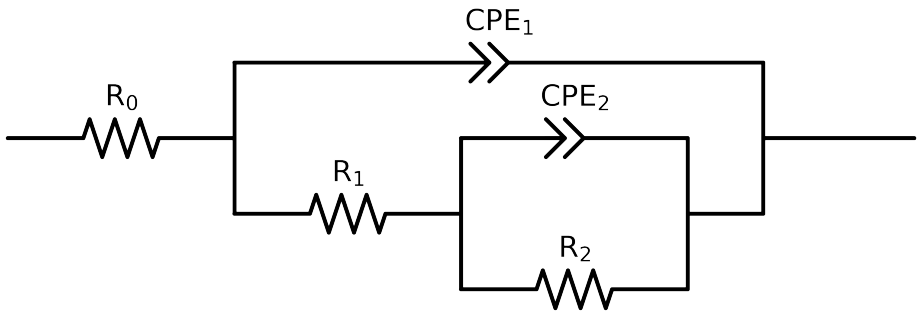

Element	Unit	Bounds	Cauvel_2_8HQ_4H
R_0	Ω	$[1.0e-03, 1.0e+03]$	$6.34e+01 \pm 4.4e-01$
R_1	Ω	$[1.0e+00, 1.0e+08]$	$5.21e+03 \pm 1.9e+03$
R_2	Ω	$[1.0e+00, 1.0e+12]$	$4.23e+04 \pm 1.7e+03$
Q_2	Ω^{-1} sec^a	$[1.0e-11, 1.0e-03]$	$1.59e-06 \pm 7.3e-07$
n_2	-	$[5.0e-01, 1.0e+00]$	$1.00e+00 \pm 7.8e-02$
Q_1	Ω^{-1} sec^a	$[1.0e-11, 1.0e-03]$	$1.24e-05 \pm 7.9e-07$
n_1	-	$[5.0e-01, 1.0e+00]$	$8.97e-01 \pm 8.2e-03$
χ^2	-	-	$3.365e-04$

Analysis Results: 4H

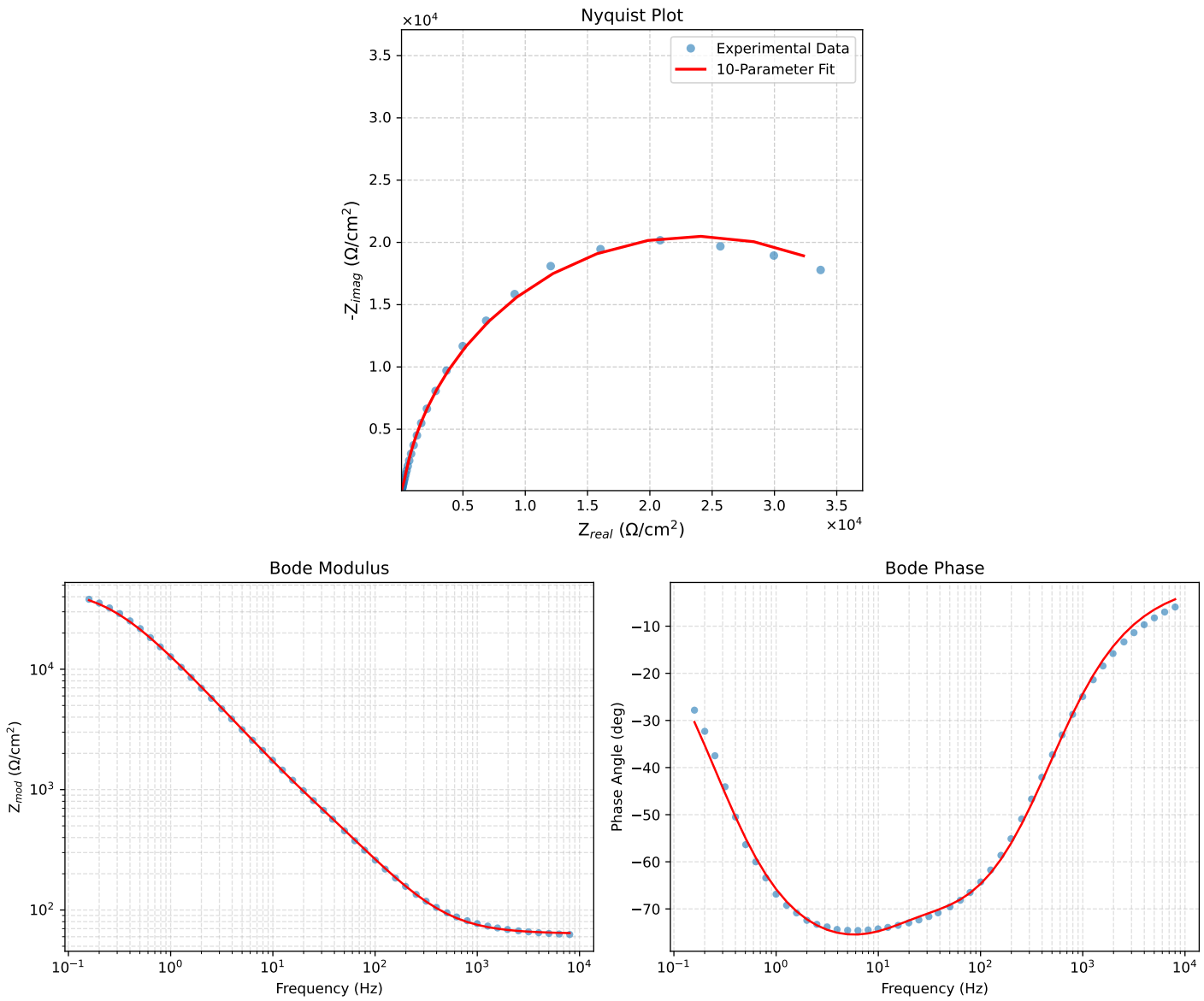

Figure 1: EIS Fit Results for Cauvel_2_8HQ_4H