Comparative EIS Kinetics Report

Model Structure: `R0-p(R1-p(R2,CPE2),CPE1)`
Used data: altered data, first 0 points removed and points with $freq > 1e+04$ and $freq < 1e-01$ removed

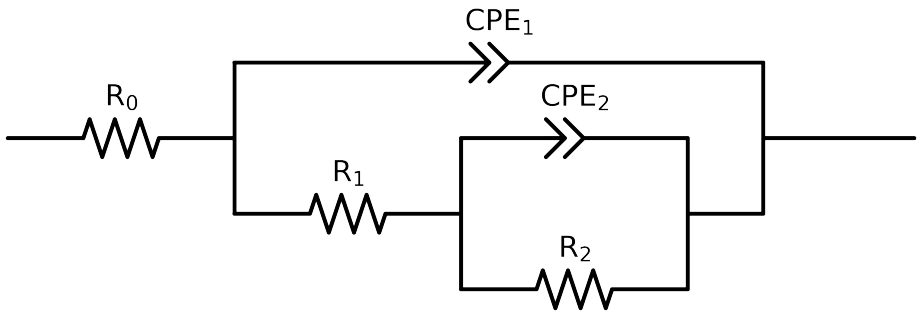

Element	Unit	Bounds	Cauvel_3_BTA_24H
R_0	Ω	$[1.0e-03, 1.0e+03]$	$8.06e+01 \pm 2.8e-01$
R_1	Ω	$[1.0e+00, 1.0e+08]$	$1.17e+04 \pm 6.5e+02$
R_2	Ω	$[1.0e+00, 1.0e+08]$	$5.79e+04 \pm 1.1e+03$
Q_2	Ω^{-1} sec^a	$[1.0e-11, 1.0e-03]$	$7.20e-06 \pm 2.0e-07$
n_2	-	$[5.0e-01, 1.0e+00]$	$8.90e-01 \pm 1.4e-02$
Q_1	Ω^{-1} sec^a	$[1.0e-11, 1.0e-03]$	$1.30e-05 \pm 1.9e-07$
n_1	-	$[5.0e-01, 1.0e+00]$	$8.54e-01 \pm 2.2e-03$
χ^2	-	-	$8.921e-05$

Analysis Results: 24H

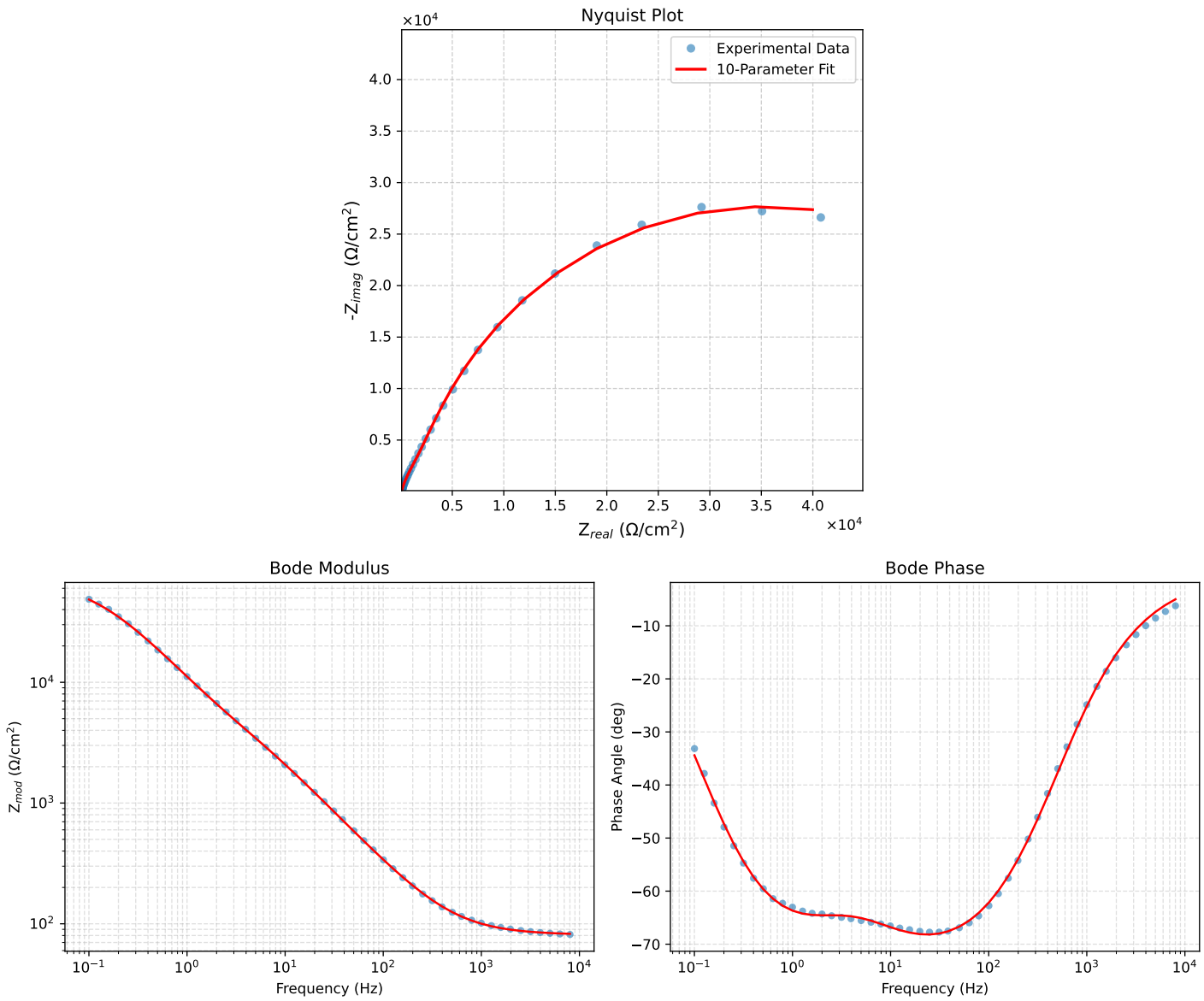

Figure 1: EIS Fit Results for Cauvel_3_BTA_24H