Comparative EIS Kinetics Report

Model Structure: `R0-p(R1,CPE1)`
Used data: altered data, first 3 points removed and points with $freq > 1e+04$ and $freq < 1e-03$ removed

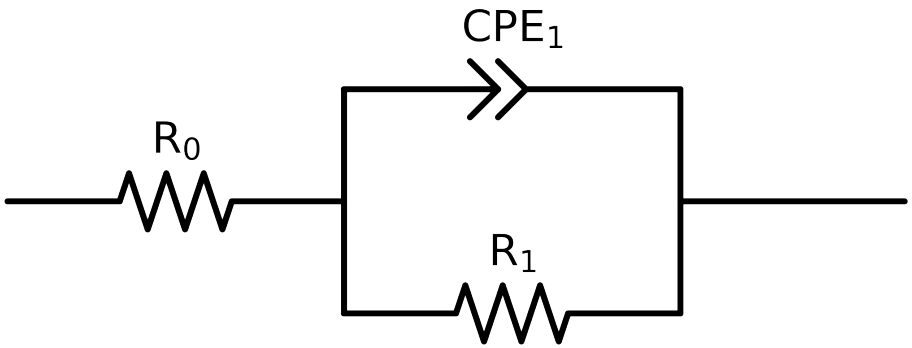

Element	Unit	Bounds	Cauvel_1_Lcystine_8H	Cauvel_1_Lcystine_24H	Cauvel_1_Lcystine_48H	Cauvel_1_Lcystine_72H	Cauvel_1_Lcystine_168H
R_0	Ω	$[1.0e-03, 1.0e+03]$	$7.99e+01 \pm 5.5e-01$	$7.95e+01 \pm 4.8e-01$	$8.19e+01 \pm 3.7e-01$	$8.06e+01 \pm 4.1e-01$	$8.48e+01 \pm 6.6e-01$
R_1	Ω	$[1.0e+00, 1.0e+12]$	$2.21e+05 \pm 2.2e+03$	$3.19e+05 \pm 3.3e+03$	$2.44e+05 \pm 1.7e+03$	$3.10e+05 \pm 2.6e+03$	$4.10e+05 \pm 6.2e+03$
Q_1	Ω^{-1} sec^a	$[1.0e-11, 1.0e-03]$	$9.43e-06 \pm 5.7e-08$	$1.01e-05 \pm 4.8e-08$	$1.01e-05 \pm 3.7e-08$	$9.95e-06 \pm 3.8e-08$	$9.86e-06 \pm 5.5e-08$
n_1	-	$[5.0e-01, 1.0e+00]$	$8.82e-01 \pm 1.3e-03$	$8.61e-01 \pm 1.0e-03$	$8.49e-01 \pm 7.7e-04$	$8.43e-01 \pm 8.0e-04$	$8.33e-01 \pm 1.2e-03$
χ^2	-	-	$4.896e-04$	$3.441e-04$	$1.861e-04$	$2.154e-04$	$5.051e-04$

Analysis Results: 8H

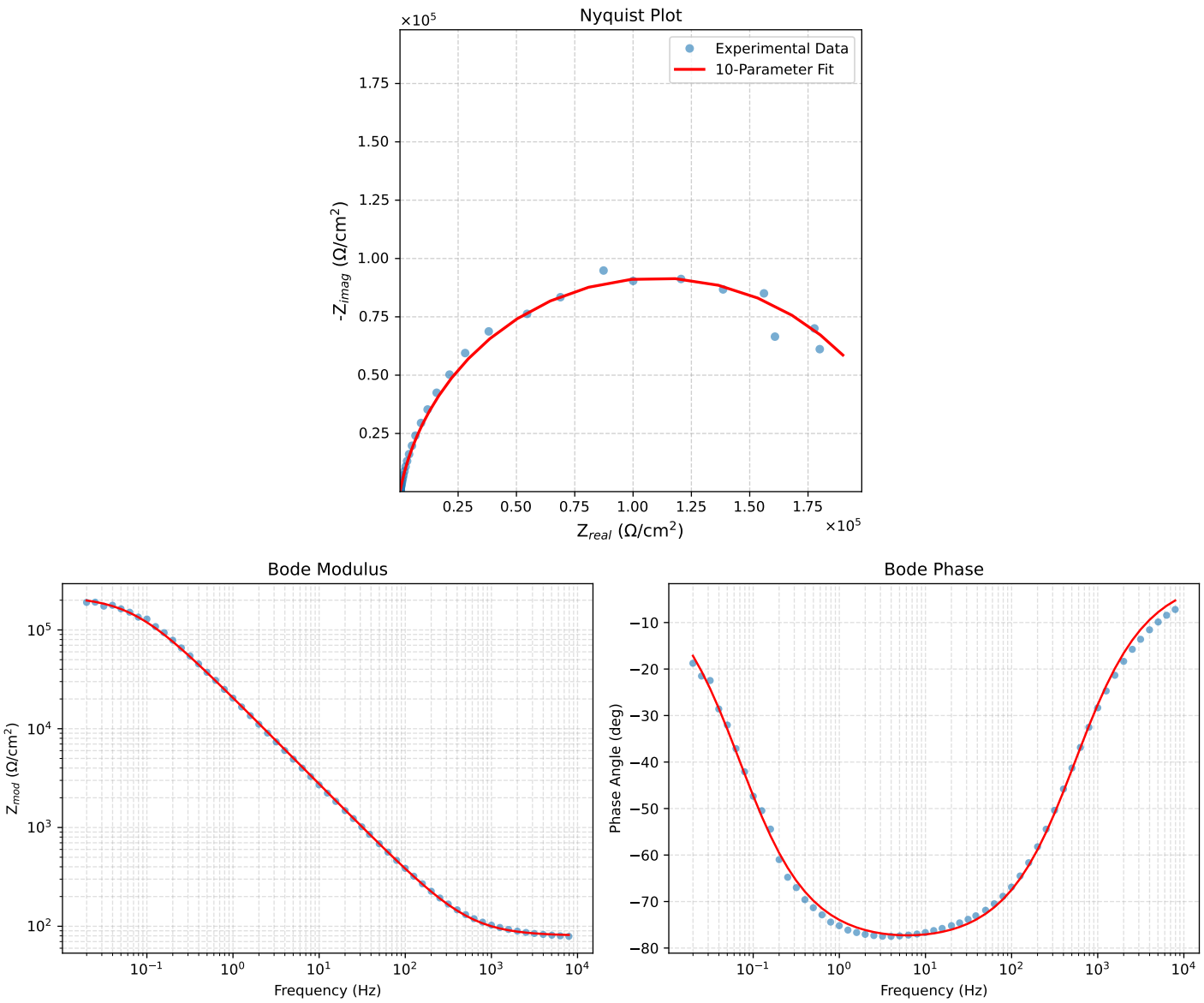

Figure 1: EIS Fit Results for Cauvel_1_Lcystine_8H

Analysis Results: 24H

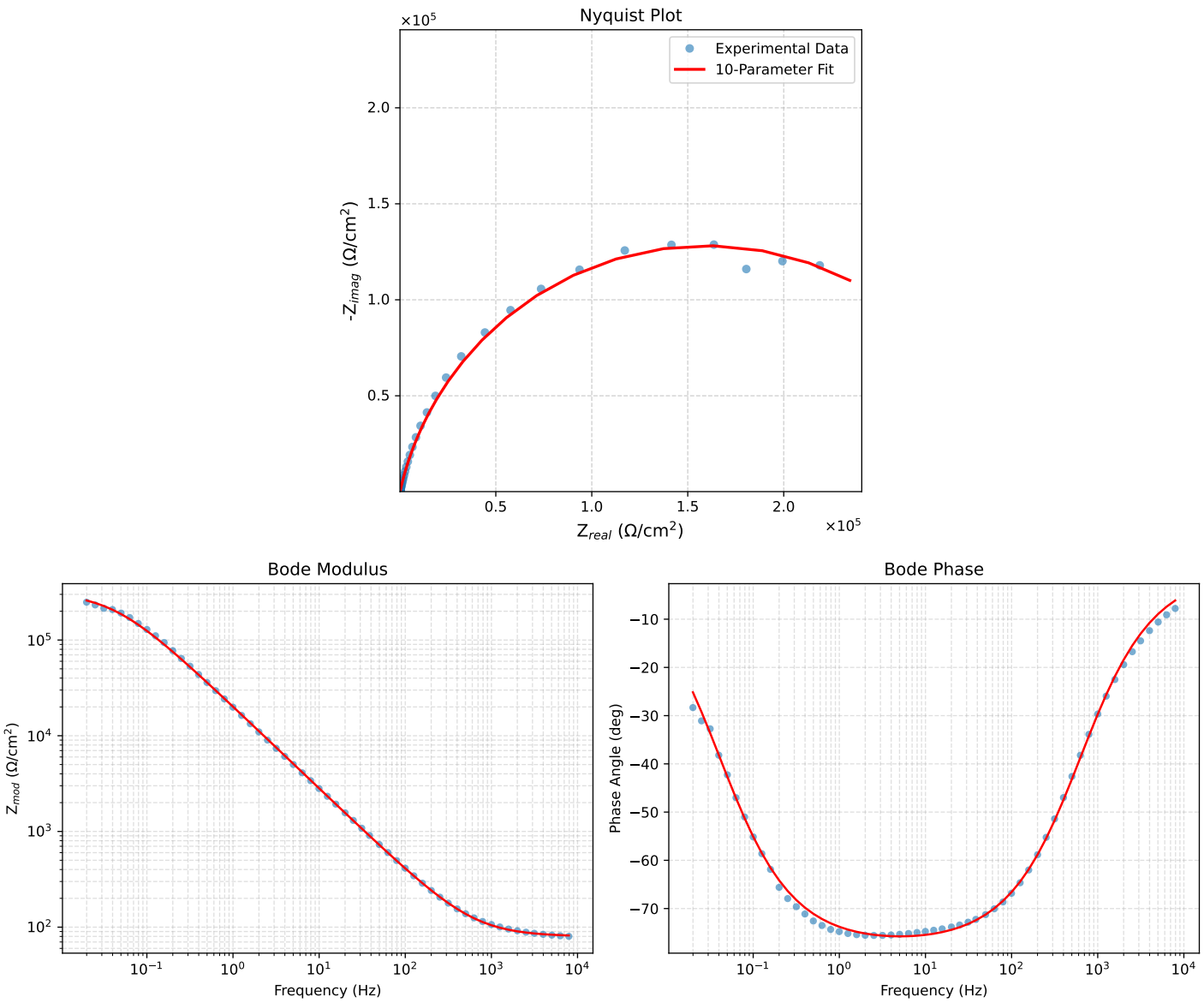

Figure 2: EIS Fit Results for Cauvel_1_Lcystine_24H

Analysis Results: 48H

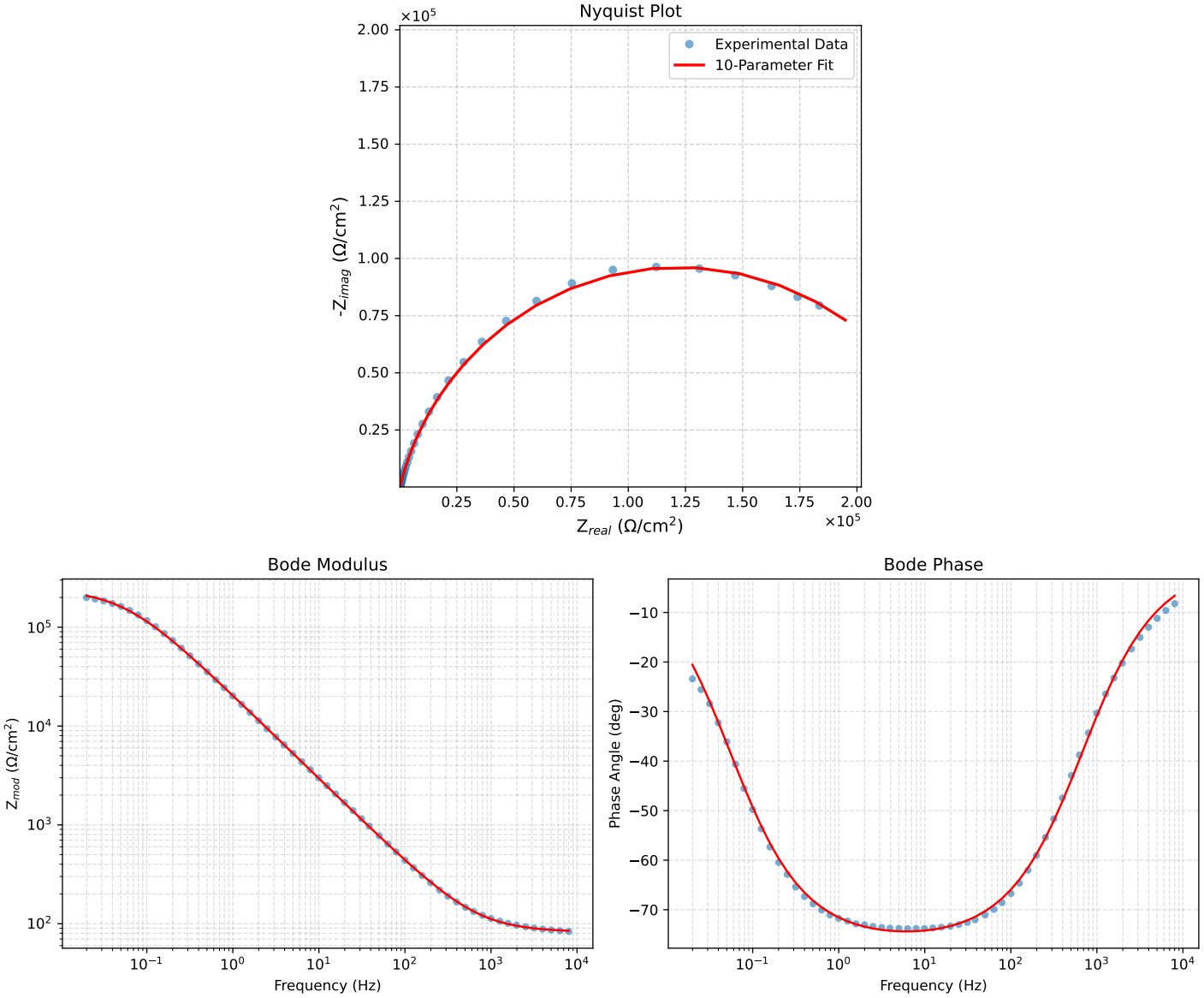

Figure 3: EIS Fit Results for Cauvel_1_Lcystine_48H

Analysis Results: 72H

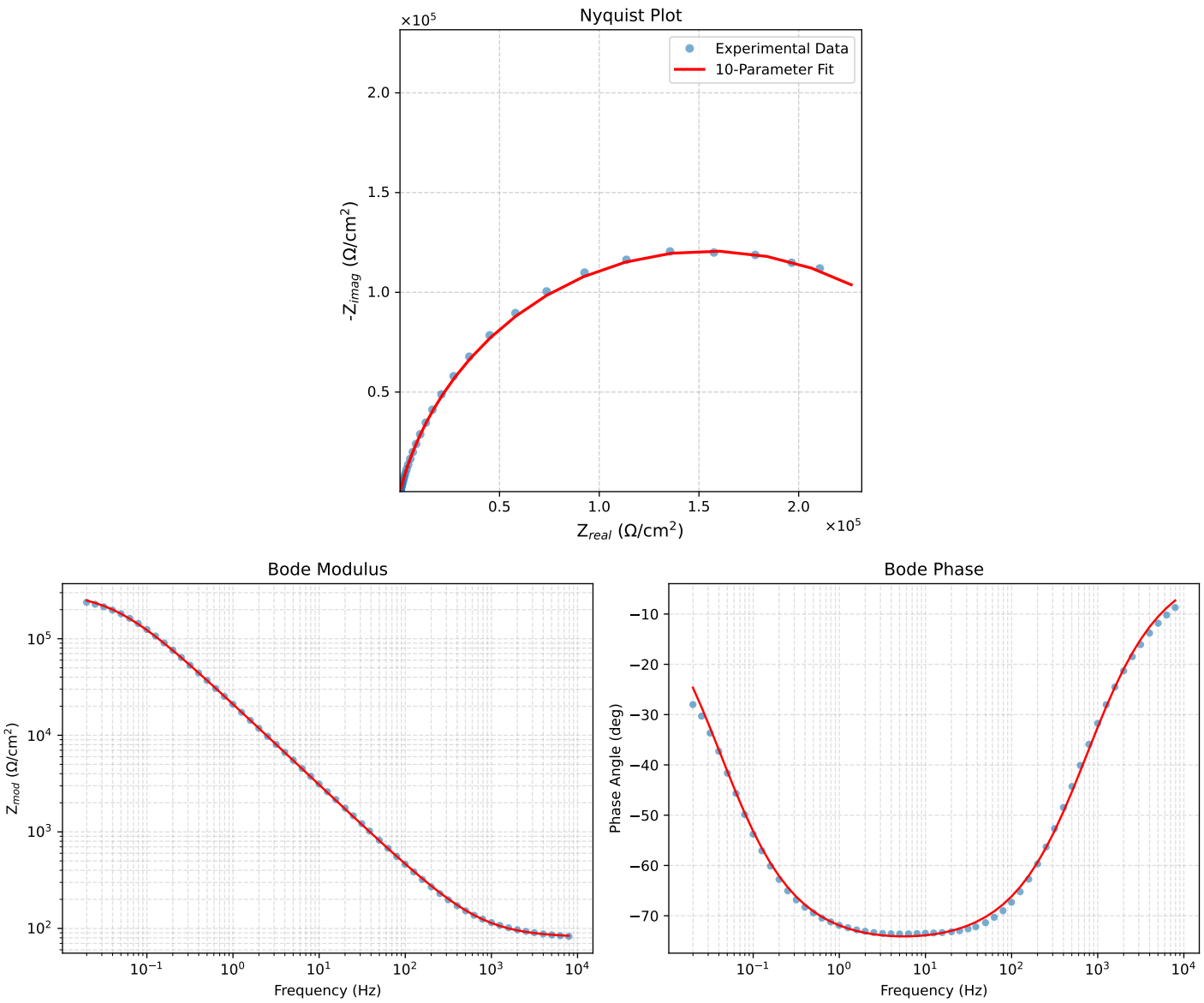

Figure 4: EIS Fit Results for Cauvel_1_Lcystine_72H

Analysis Results: 168H

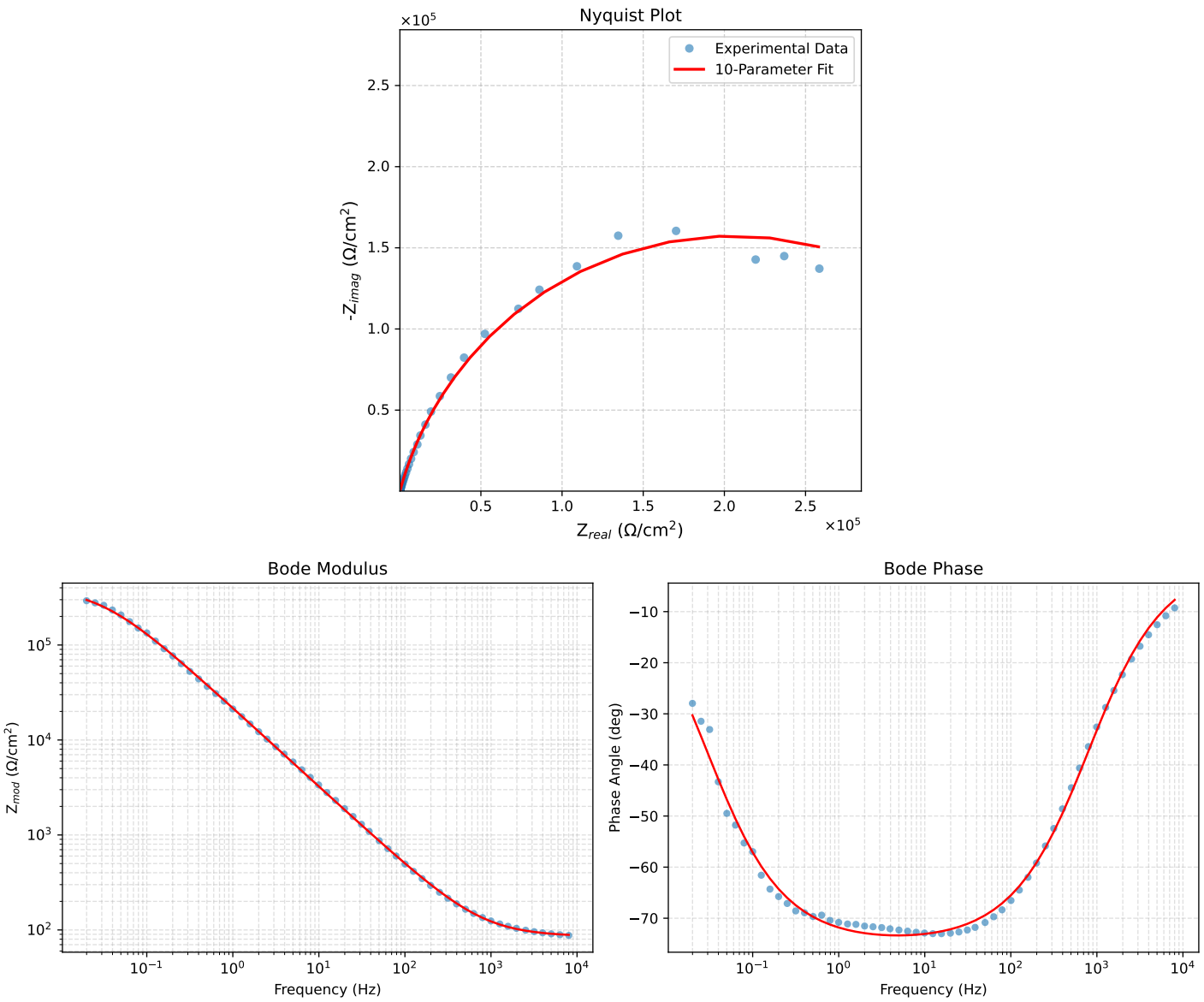

Figure 5: EIS Fit Results for Cauvel_1_Lcystine_168H