Comparative EIS Kinetics Report

Model Structure: `R0-p(R1-p(R2,CPE2),CPE1)`
Used data: altered data, first 2 points removed and points with $freq > 1e+04$ and $freq < 1e-03$ removed

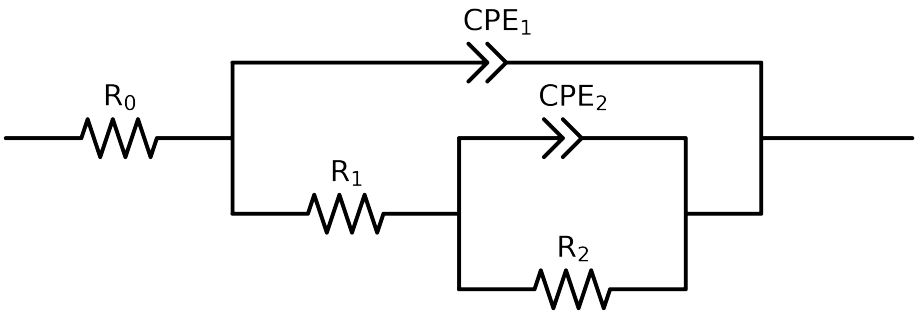

Element	Unit	Bounds	Cauvel_3_Mo_168H
R_0	Ω	$[1.0e-03, 1.0e+03]$	$6.32e+01 \pm 3.0e-01$
R_1	Ω	$[1.0e+00, 1.0e+08]$	$3.73e+03 \pm 2.0e+02$
R_2	Ω	$[1.0e+00, 1.0e+12]$	$1.13e+04 \pm 9.4e+02$
Q_2	Ω^{-1} sec^a	$[1.0e-11, 1.0e-03]$	$4.84e-04 \pm 3.5e-05$
n_2	-	$[5.0e-01, 1.0e+00]$	$7.93e-01 \pm 3.7e-02$
Q_1	Ω^{-1} sec^a	$[1.0e-11, 1.0e-03]$	$1.85e-04 \pm 3.4e-06$
n_1	-	$[5.0e-01, 1.0e+00]$	$8.72e-01 \pm 4.5e-03$
χ^2	-	-	$4.326e-04$

Analysis Results: 168H

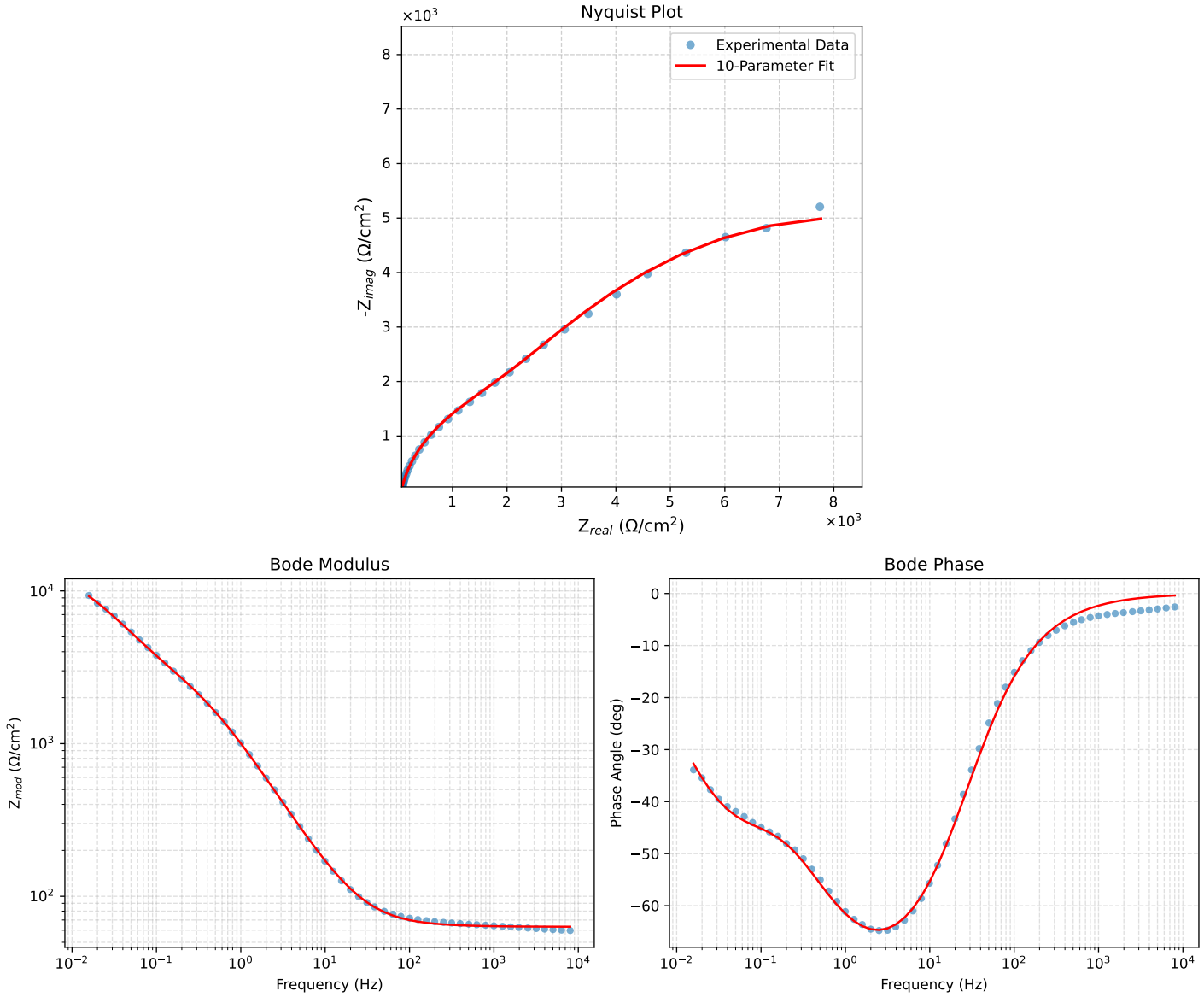

Figure 1: EIS Fit Results for Cauvel_3_Mo_168H