Comparative EIS Kinetics Report

Model Structure: `R0-p(R1-p(R2,CPE2),CPE1)`
Used data: altered data, first 0 points removed and points with $freq > 1e+04$ and $freq < 1e-03$ removed

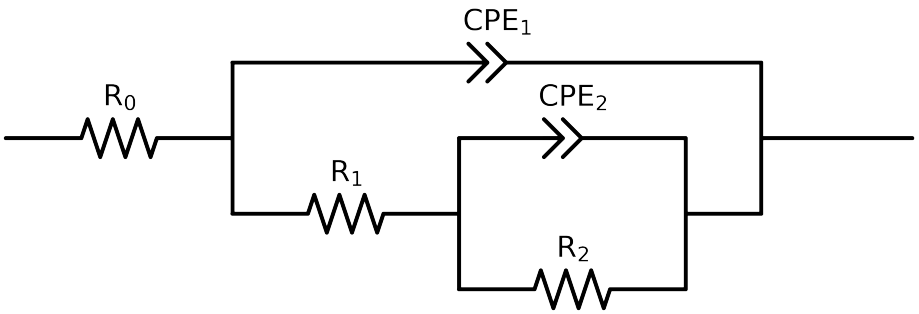

Element	Unit	Bounds	Cauvel_4_NaCl_8H
R_0	Ω	$[1.0e-03, 1.0e+03]$	$7.64e+01 \pm 2.6e-01$
R_1	Ω	$[1.0e+00, 1.0e+08]$	$7.87e+03 \pm 6.9e+02$
R_2	Ω	$[1.0e+00, 1.0e+12]$	$2.36e+04 \pm 3.8e+03$
Q_2	$\Omega^{-1}\ \mathrm{sec}^a$	$[1.0e-11, 1.0e-03]$	$2.11e-04 \pm 2.9e-05$
n_2	-	$[5.0e-01, 1.0e+00]$	$5.00e-01 \pm 5.1e-02$
Q_1	$\Omega^{-1}\ \mathrm{sec}^a$	$[1.0e-11, 1.0e-03]$	$8.56e-05 \pm 1.2e-06$
n_1	-	$[5.0e-01, 1.0e+00]$	$8.28e-01 \pm 2.9e-03$
χ^2	-	-	$1.706e-04$

Analysis Results: 8H

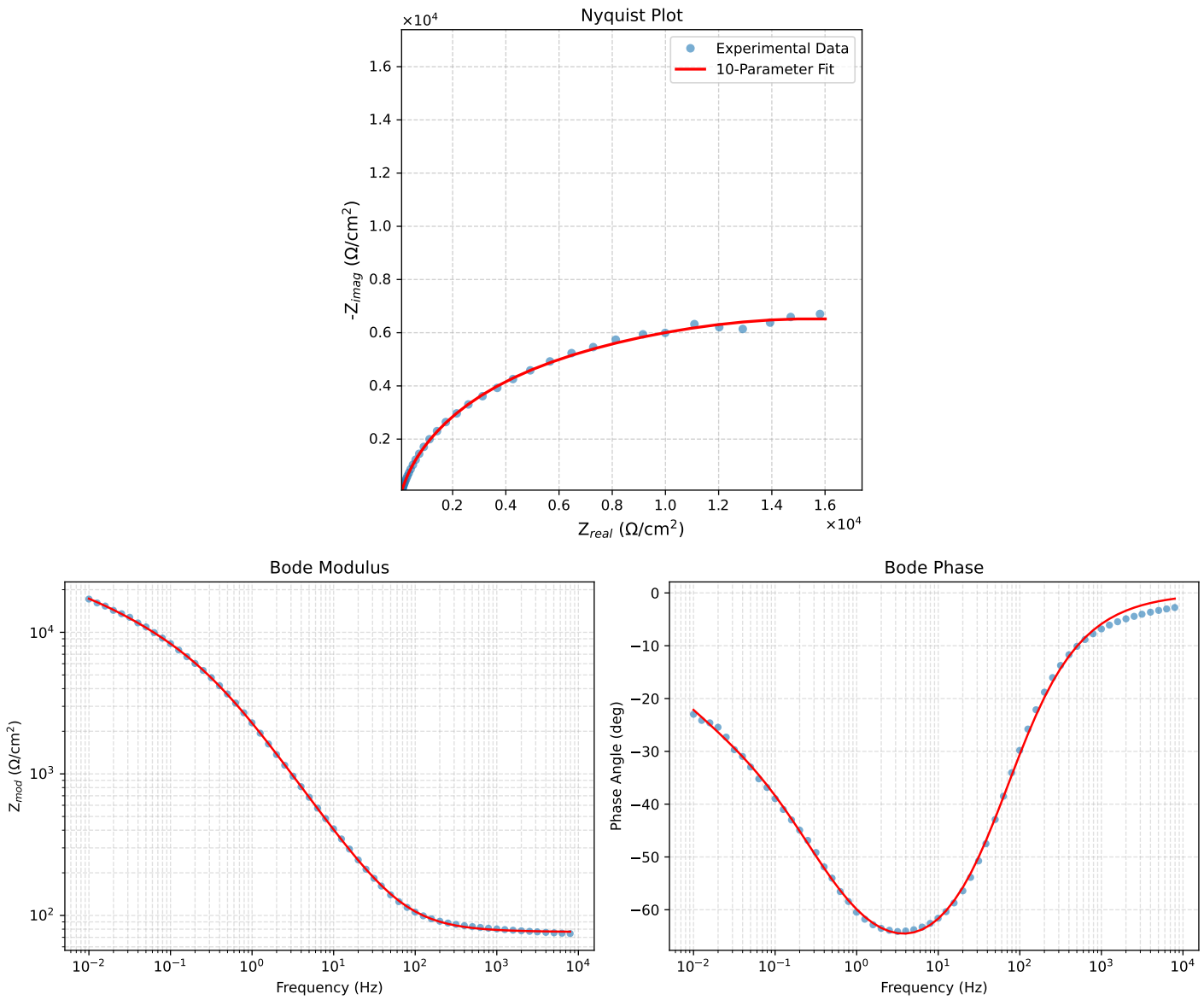

Figure 1: EIS Fit Results for Cauvel_4_NaCl_8H