Comparative EIS Kinetics Report

Model Structure: `R0-p(R1-p(R2,CPE2),CPE1)`
Used data: altered data, first 4 points removed and points with $freq > 2e+04$ and $freq < 1e-03$ removed

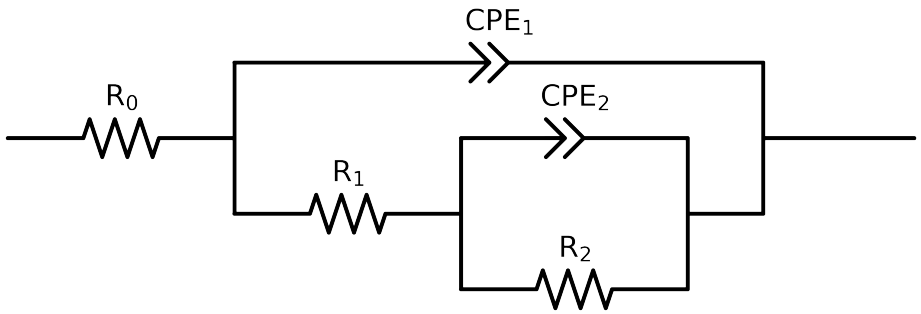

Element	Unit	Bounds	Cauvel_4_NaVO3_72H	Cauvel_4_NaVO3_168H
R_0	Ω	$[1.0e-05, 1.0e+03]$	$6.60e+01 \pm 1.4e-01$	$6.92e+01 \pm 2.6e-01$
R_1	Ω	$[1.0e+00, 1.0e+08]$	$3.24e+05 \pm 3.7e+03$	$2.63e+05 \pm 1.6e+04$
R_2	Ω	$[1.0e+00, 1.0e+12]$	$5.42e+11 \pm 2.4e-05$	$2.55e+06 \pm 1.4e+01$
Q_2	Ω^{-1} sec^a	$[1.0e-11, 1.0e-03]$	$1.69e-04 \pm 2.8e-05$	$2.42e-05 \pm 6.5e-06$
n_2	-	$[5.0e-01, 1.0e+00]$	$1.00e+00 \pm 8.6e-02$	$5.00e-01 \pm 8.1e-02$
Q_1	Ω^{-1} sec^a	$[1.0e-11, 1.0e-03]$	$1.07e-05 \pm 2.4e-08$	$1.09e-05 \pm 5.5e-08$
n_1	-	$[5.0e-01, 1.0e+00]$	$8.38e-01 \pm 4.4e-04$	$8.29e-01 \pm 9.2e-04$
χ^2	-	-	$4.917e-05$	$1.318e-04$

Analysis Results: 72H

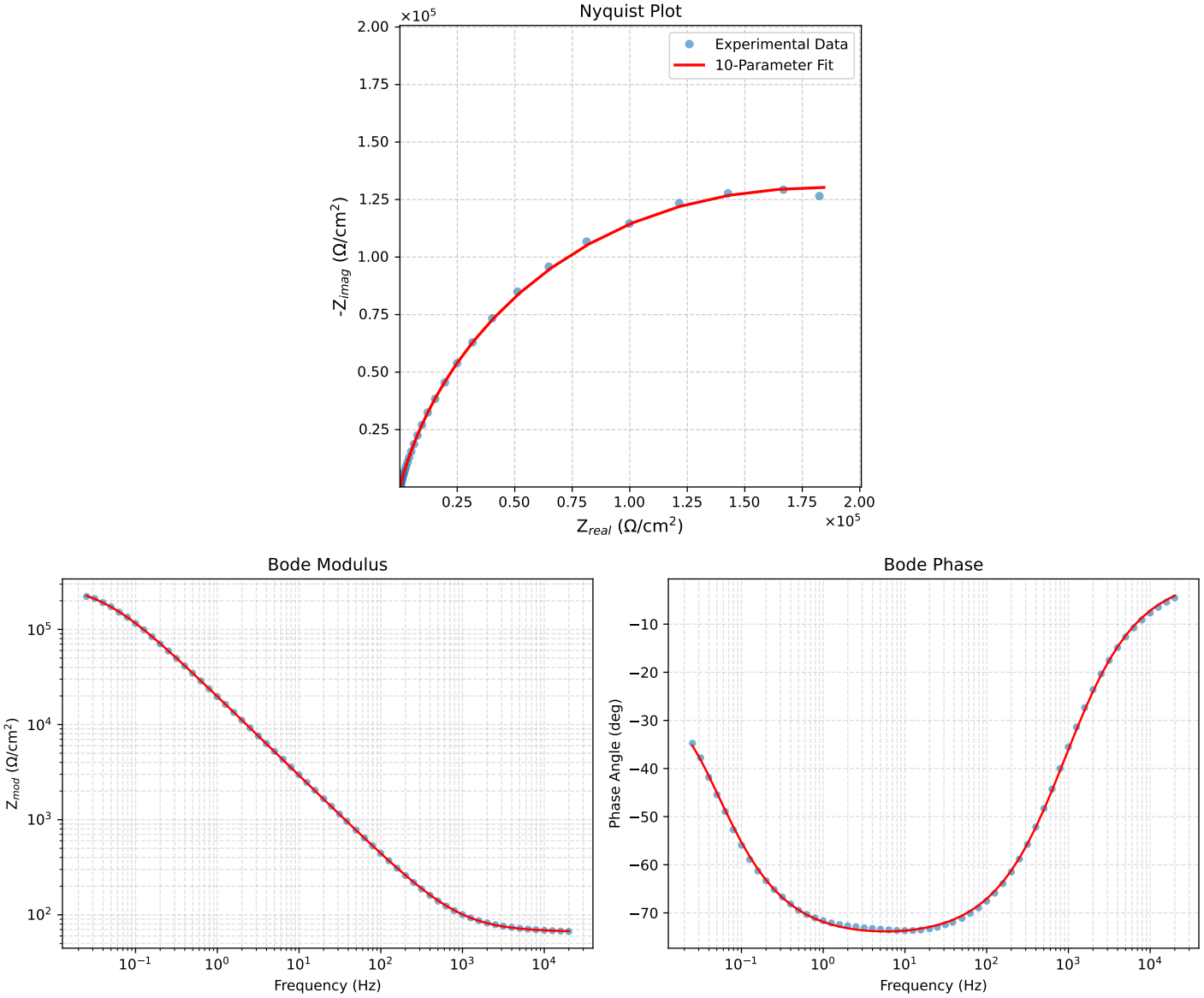

Figure 1: EIS Fit Results for Cauvel_4_NaVO3_72H

Analysis Results: 168H

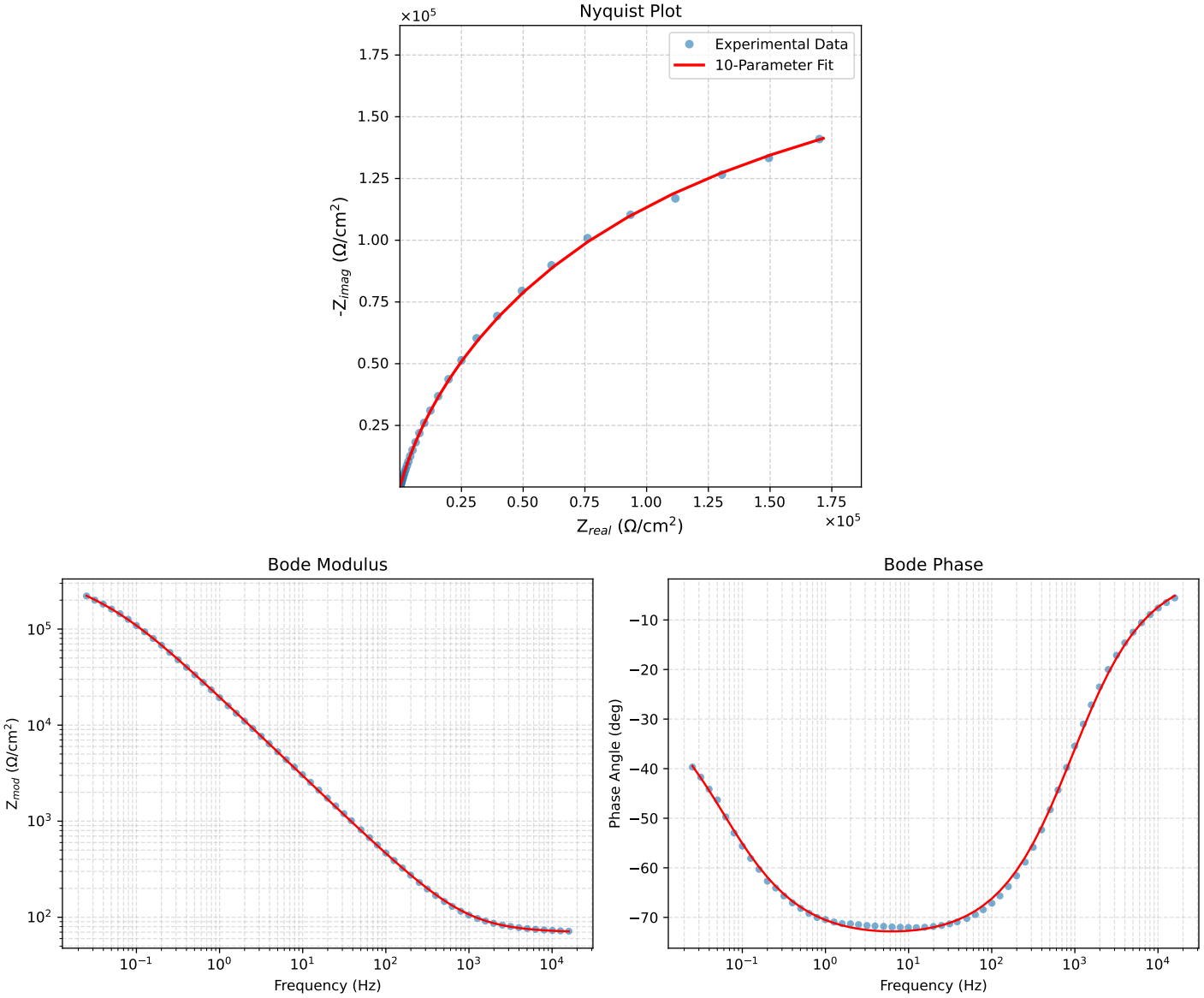

Figure 2: EIS Fit Results for Cauvel_4_NaVO3_168H