Comparative EIS Kinetics Report

Model Structure: `R0-p(R1-p(R2-p(R3,CPE3),CPE2),CPE1)`
Used data: altered data, first 2 points removed and points with $freq > 4e+04$ and $freq < 1e-03$ removed

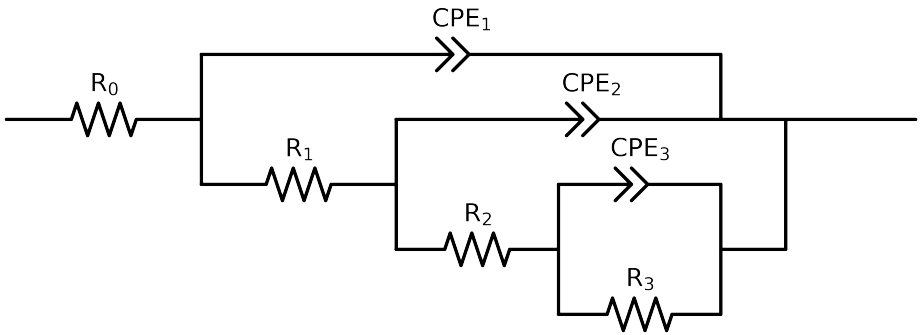

Element	Unit	Bounds	Cauvel_3_Mo_168H
R_0	Ω	$[1.0e-03, 1.0e+03]$	$5.78e+01 \pm 1.7e-01$
R_1	Ω	$[1.0e+00, 1.0e+03]$	$1.17e+01 \pm 7.4e-01$
R_2	Ω	$[1.0e+00, 1.0e+08]$	$3.39e+03 \pm 1.5e+02$
R_3	Ω	$[1.0e+00, 1.0e+08]$	$1.23e+04 \pm 4.1e+02$
Q_3	Ω^{-1} sec^a	$[1.0e-11, 1.0e-03]$	$4.40e-04 \pm 1.0e-05$
n_3	-	$[5.0e-01, 1.0e+00]$	$7.55e-01 \pm 1.4e-02$
Q_2	Ω^{-1} sec^a	$[1.0e-11, 1.0e-03]$	$1.26e-04 \pm 1.1e-05$
n_2	-	$[5.0e-01, 1.0e+00]$	$9.11e-01 \pm 1.0e-02$
Q_1	Ω^{-1} sec^a	$[1.0e-11, 1.0e-03]$	$5.27e-05 \pm 1.5e-05$
n_1	-	$[5.0e-01, 1.0e+00]$	$7.96e-01 \pm 2.9e-02$
χ^2	-	-	$4.083e-05$

Analysis Results: 168H

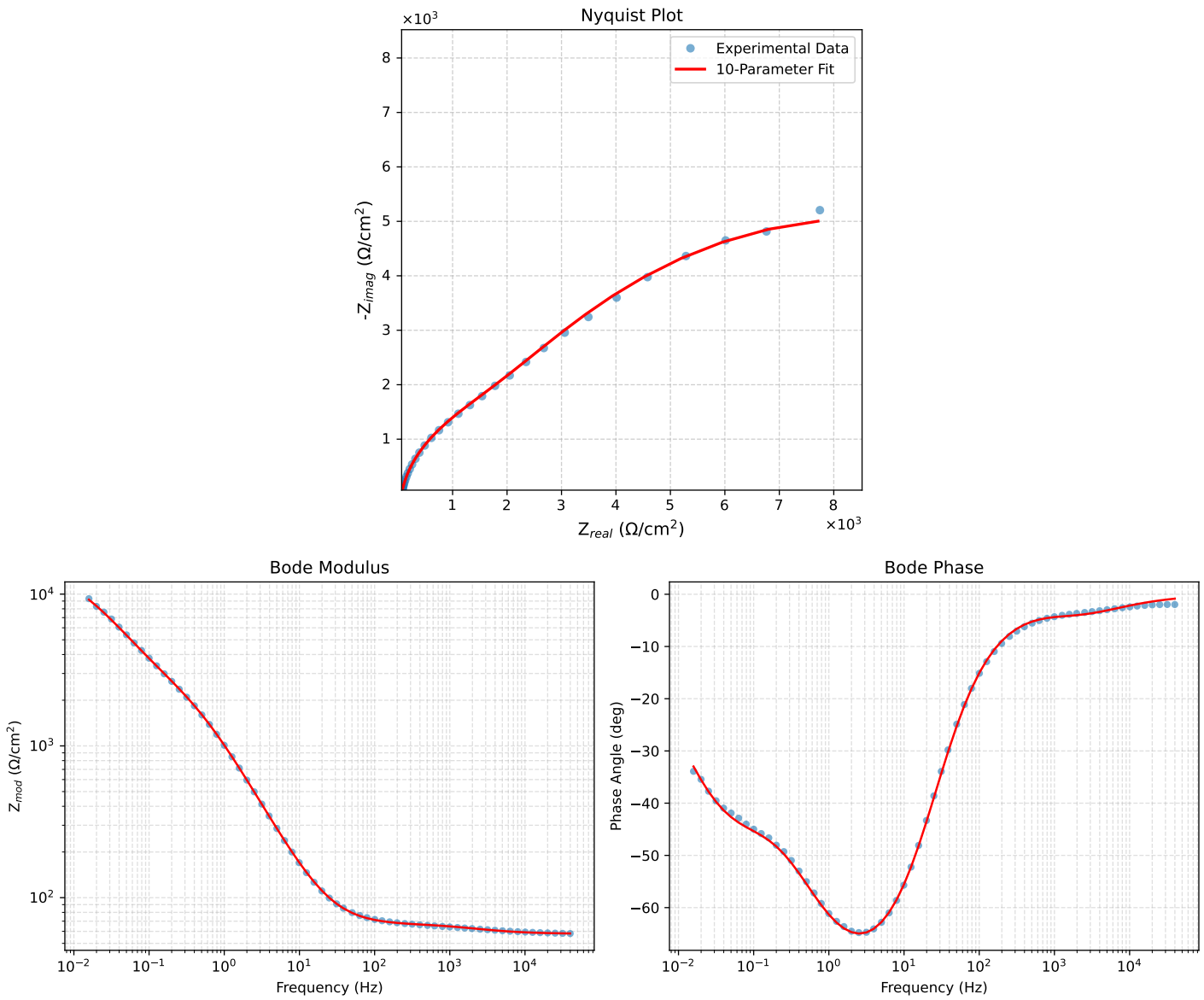

Figure 1: EIS Fit Results for Cauvel_3_Mo_168H