Comparative EIS Kinetics Report

Model Structure: `R0-p(R1-p(R2-p(R3,CPE3),CPE2),CPE1)`
Used data: original data

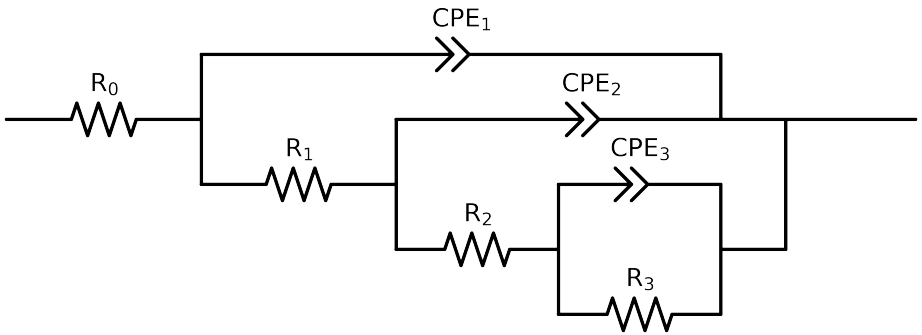

Element	Unit	Bounds	Cauvel_4_NaCl_24H	Cauvel_4_NaCl_48H
R_0	Ω	$[1.0e-03, 1.0e+03]$	$7.26e+01 \pm 7.3e-01$	$6.77e+01 \pm 2.0e-01$
R_1	Ω	$[1.0e+00, 1.0e+03]$	$8.49e+00 \pm 9.0e+03$	$1.51e+01 \pm 2.3e+00$
R_2	Ω	$[1.0e+00, 1.0e+08]$	$2.36e+04 \pm 2.0e+04$	$2.18e+03 \pm 2.5e+02$
R_3	Ω	$[1.0e+00, 1.0e+08]$	$5.65e+06 \pm 7.0e-02$	$3.36e+04 \pm 1.2e+03$
Q_3	Ω^{-1} sec^a	$[1.0e-11, 1.0e-03]$	$5.46e-04 \pm 1.2e-03$	$1.63e-04 \pm 3.0e-06$
n_3	-	$[5.0e-01, 1.0e+00]$	$5.00e-01 \pm 4.7e-01$	$5.45e-01 \pm 8.3e-03$
Q_2	Ω^{-1} sec^a	$[1.0e-11, 1.0e-03]$	$9.59e-05 \pm 1.2e-04$	$5.84e-05 \pm 1.3e-05$
n_2	-	$[5.0e-01, 1.0e+00]$	$5.00e-01 \pm 2.0e-01$	$9.17e-01 \pm 2.1e-02$
Q_1	Ω^{-1} sec^a	$[1.0e-11, 1.0e-03]$	$6.59e-05 \pm 3.5e-05$	$2.96e-05 \pm 1.7e-05$
n_1	-	$[5.0e-01, 1.0e+00]$	$8.85e-01 \pm 3.1e-01$	$8.56e-01 \pm 5.8e-02$
χ^2	-	-	$5.241e-04$	$5.669e-05$

Analysis Results: 24H

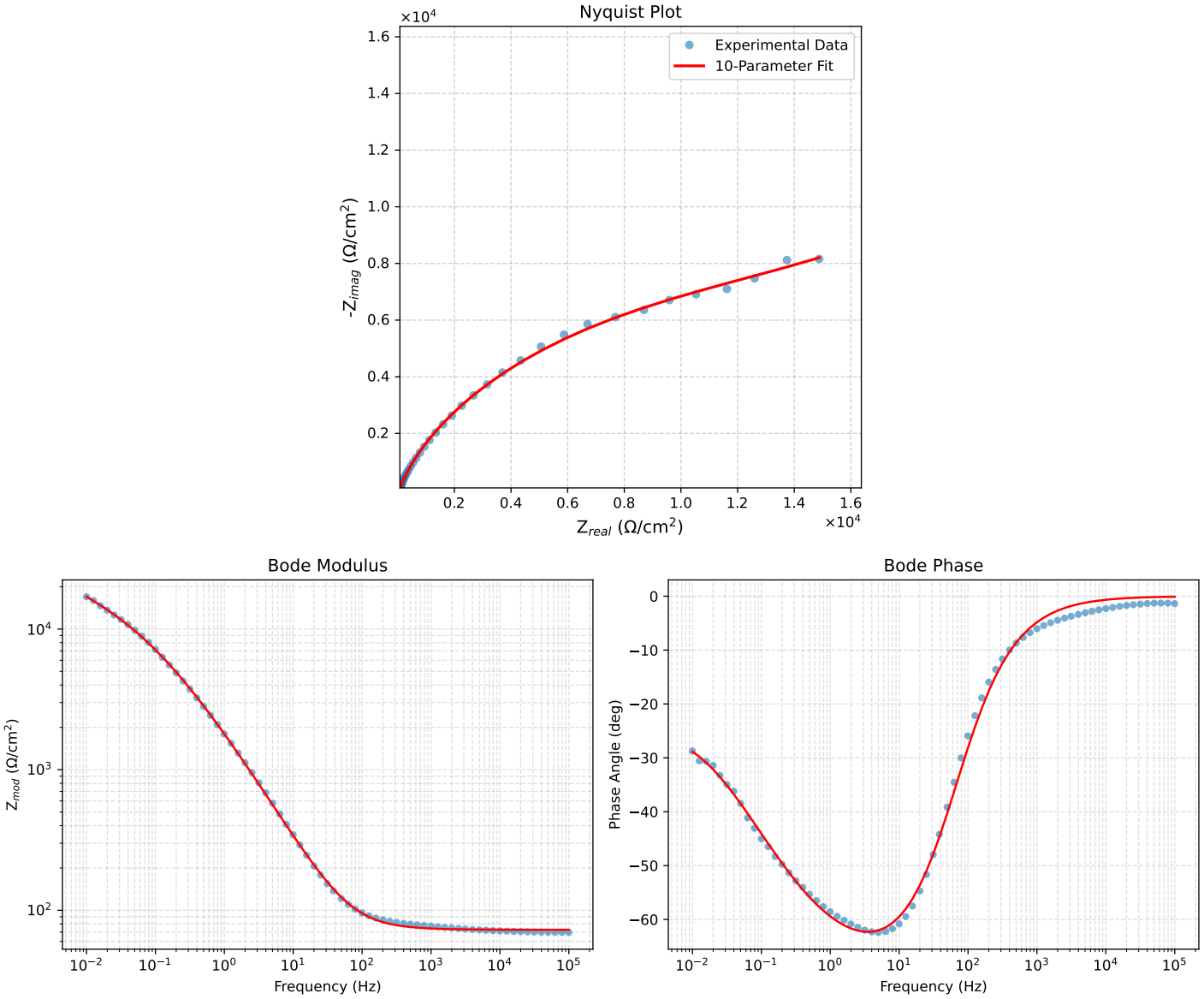

Figure 1: EIS Fit Results for Cauvel_4_NaCl_24H

Analysis Results: 48H

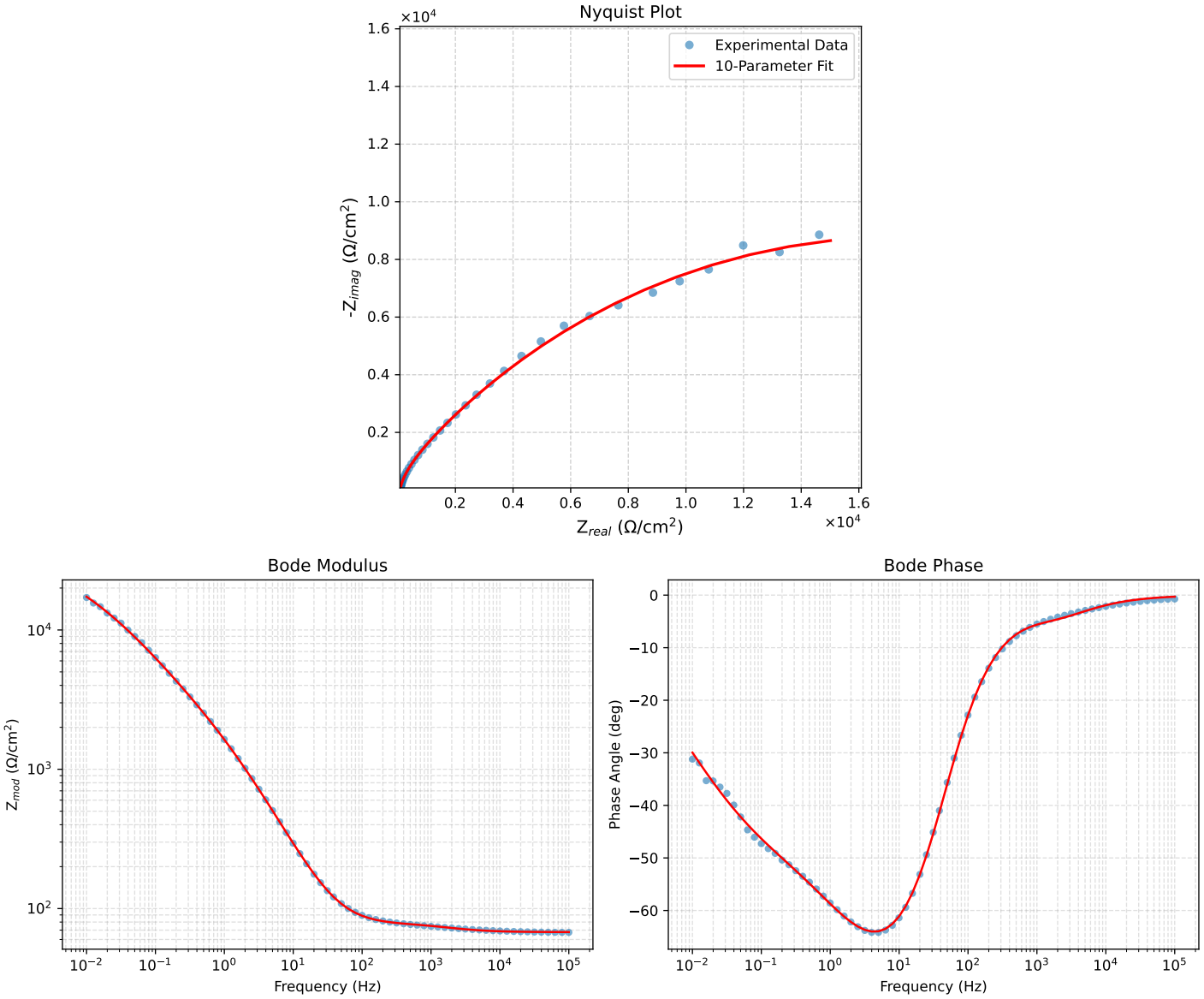

Figure 2: EIS Fit Results for Cauvel_4_NaCl_48H