Comparative EIS Kinetics Report

Model Structure: `R0-p(R1-p(R2-p(R3,CPE3),CPE2),CPE1)`
Used data: original data

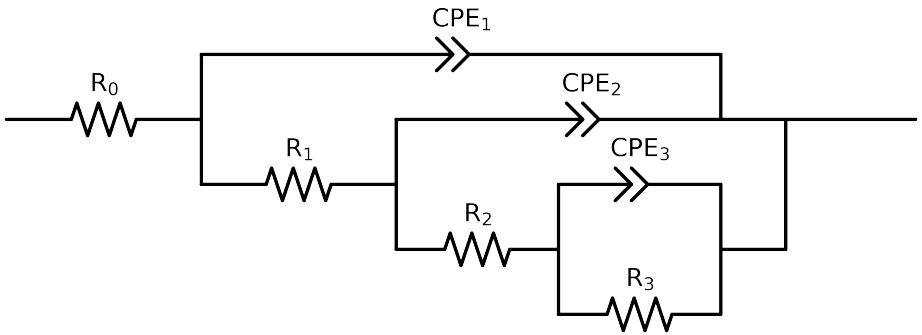

Element	Unit	Bounds	Cauvel_4_NaCl_72H
R_0	Ω	$[1.0e-03, 1.0e+03]$	$6.38e+01 \pm 1.4e-01$
R_1	Ω	$[1.0e+00, 1.0e+03]$	$1.37e+01 \pm 1.5e+00$
R_2	Ω	$[1.0e+00, 1.0e+08]$	$2.32e+03 \pm 1.7e+02$
R_3	Ω	$[1.0e+00, 1.0e+08]$	$4.88e+04 \pm 2.0e+03$
Q_3	Ω^{-1} sec^a	$[1.0e-11, 1.0e-03]$	$1.94e-04 \pm 2.3e-06$
n_3	-	$[5.0e-01, 1.0e+00]$	$5.50e-01 \pm 6.7e-03$
Q_2	Ω^{-1} sec^a	$[1.0e-11, 1.0e-03]$	$6.98e-05 \pm 1.1e-05$
n_2	-	$[5.0e-01, 1.0e+00]$	$9.15e-01 \pm 1.5e-02$
Q_1	Ω^{-1} sec^a	$[1.0e-11, 1.0e-03]$	$3.22e-05 \pm 1.4e-05$
n_1	-	$[5.0e-01, 1.0e+00]$	$8.57e-01 \pm 4.2e-02$
χ^2	-	-	$3.250e-05$

Analysis Results: 72H

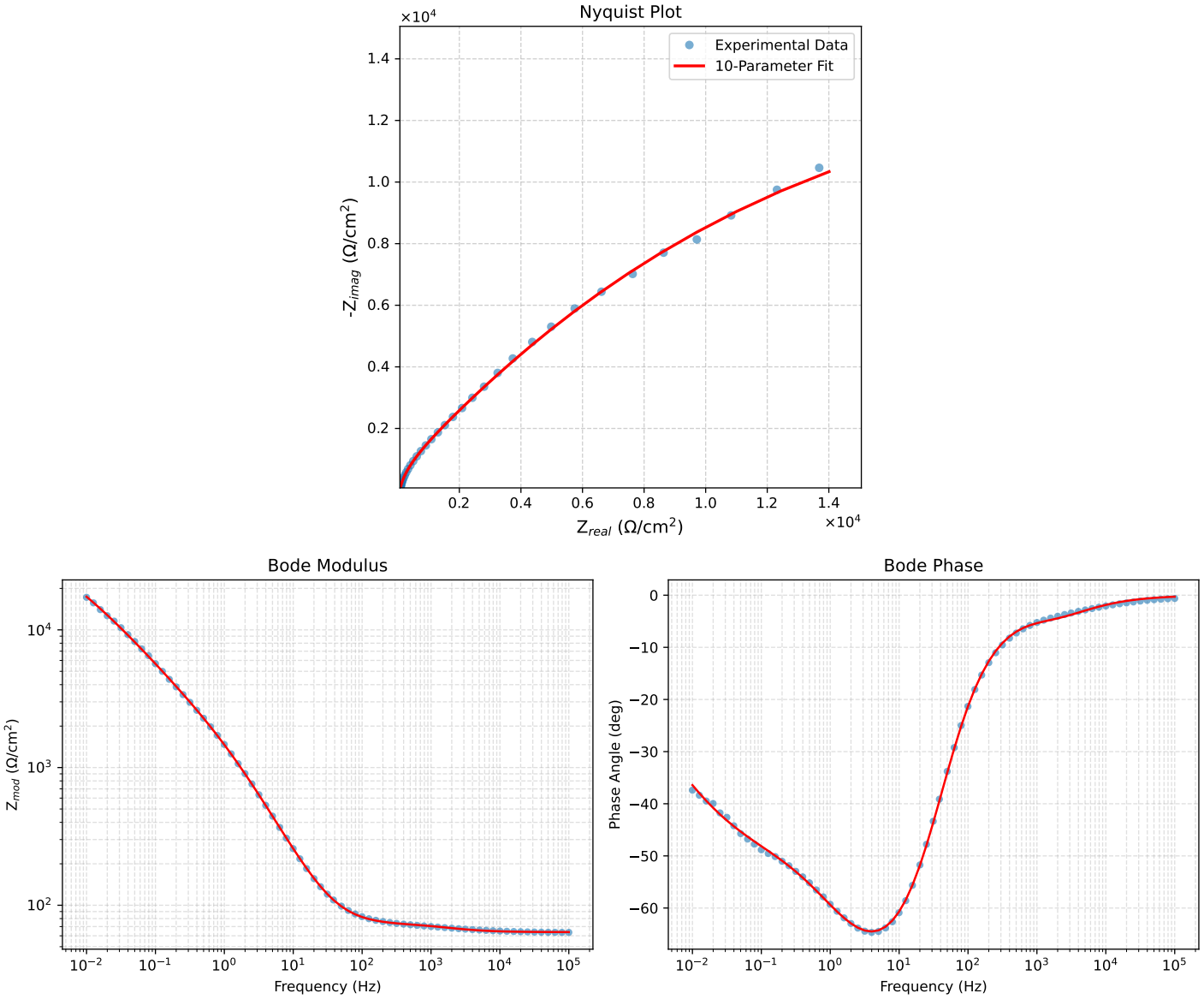

Figure 1: EIS Fit Results for Cauvel_4_NaCl_72H