# Comparative EIS Kinetics Report

**Model Structure:** `R0-p(R1-p(R2-p(R3,CPE3),CPE2),CPE1)`
**Used data:** altered data, first 2 points removed and points with $freq > 4e+04$ and $freq < 1e-03$ removed

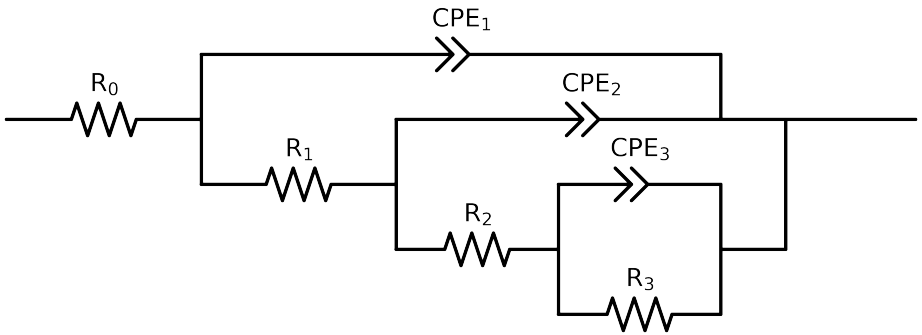


| Element | Unit | Bounds | Cauvel_4_NaCl_24H |
|---|---|---|---|
| $R_0$ | $\Omega$ | $[1.0e-03, 1.0e+03]$ | $6.37e+01 \pm 1.5e+00$ |
| $R_1$ | $\Omega$ | $[1.0e+00, 1.0e+03]$ | $9.70e+00 \pm 1.3e+00$ |
| $R_2$ | $\Omega$ | $[1.0e+00, 1.0e+08]$ | $2.44e+01 \pm 5.3e+00$ |
| $R_3$ | $\Omega$ | $[1.0e+00, 1.0e+08]$ | $3.21e+04 \pm 1.3e+03$ |
| $Q_3$ | $\Omega^{-1}$ sec$^a$ | $[1.0e-11, 1.0e-03]$ | $2.09e-05 \pm 7.1e-06$ |
| $n_3$ | - | $[5.0e-01, 1.0e+00]$ | $9.79e-01 \pm 3.4e-02$ |
| $Q_2$ | $\Omega^{-1}$ sec$^a$ | $[1.0e-11, 1.0e-03]$ | $3.08e-05 \pm 1.8e-05$ |
| $n_2$ | - | $[5.0e-01, 1.0e+00]$ | $8.73e-01 \pm 5.7e-02$ |
| $Q_1$ | $\Omega^{-1}$ sec$^a$ | $[1.0e-11, 1.0e-03]$ | $1.19e-04 \pm 1.1e-05$ |
| $n_1$ | - | $[5.0e-01, 1.0e+00]$ | $5.05e-01 \pm 2.6e-02$ |
| $\chi^2$ | - | - | $5.445e-05$ |

# Analysis Results: 24H

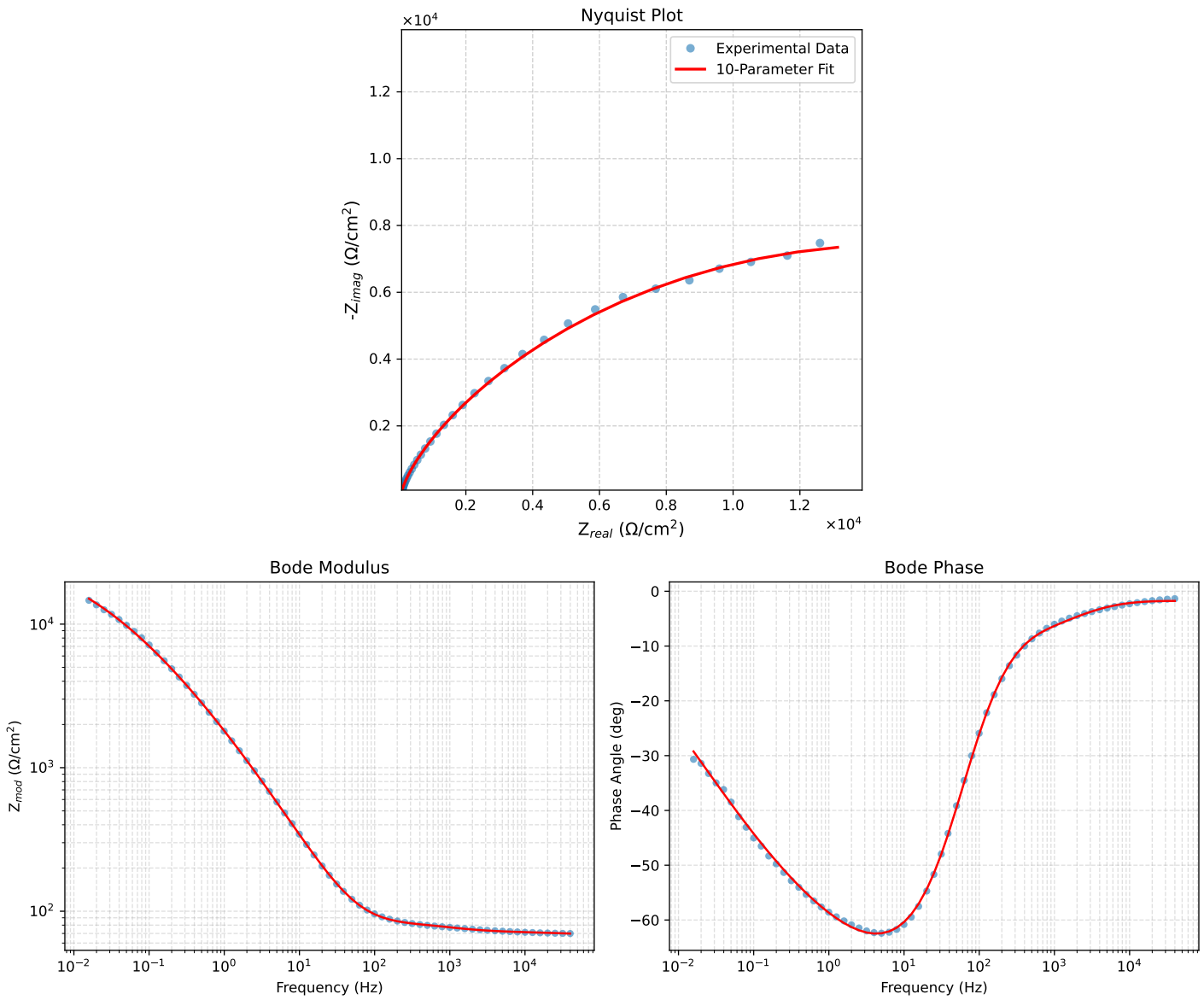


Figure 1: EIS Fit Results for Cauvel_4_NaCl_24H