Comparative EIS Kinetics Report

Model Structure: `R0-p(R1-p(R2-p(R3,CPE3),CPE2),CPE1)`
Used data: altered data, first 3 points removed and points with $freq > 4e+04$ and $freq < 1e-03$ removed

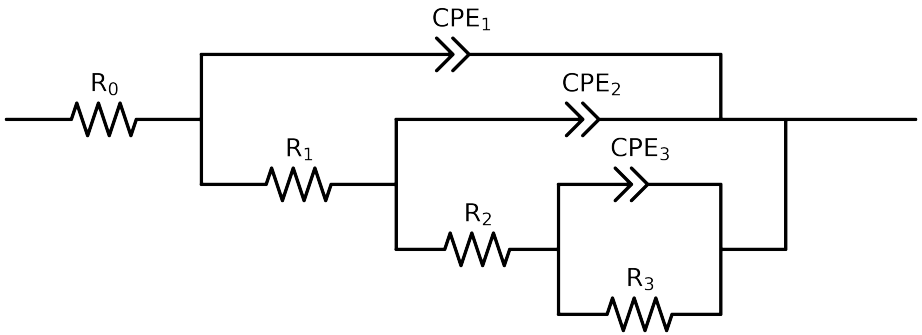

Element	Unit	Bounds	Cauvel_4_NaCl_4H
R_0	Ω	$[1.0e-03, 1.0e+03]$	$7.20e+01 \pm 1.8e-01$
R_1	Ω	$[1.0e+00, 1.0e+03]$	$1.50e+01 \pm 1.7e+00$
R_2	Ω	$[1.0e+00, 1.0e+08]$	$7.66e+03 \pm 1.2e+02$
R_3	Ω	$[1.0e+00, 1.0e+08]$	$6.43e+03 \pm 1.7e+02$
Q_3	Ω^{-1} sec^a	$[1.0e-11, 1.0e-03]$	$4.27e-04 \pm 1.6e-05$
n_3	-	$[5.0e-01, 1.0e+00]$	$9.30e-01 \pm 1.5e-02$
Q_2	Ω^{-1} sec^a	$[1.0e-11, 1.0e-03]$	$4.39e-05 \pm 6.5e-06$
n_2	-	$[5.0e-01, 1.0e+00]$	$8.55e-01 \pm 1.3e-02$
Q_1	Ω^{-1} sec^a	$[1.0e-11, 1.0e-03]$	$2.82e-05 \pm 7.2e-06$
n_1	-	$[5.0e-01, 1.0e+00]$	$8.19e-01 \pm 2.2e-02$
χ^2	-	-	$3.050e-05$

Analysis Results: 4H

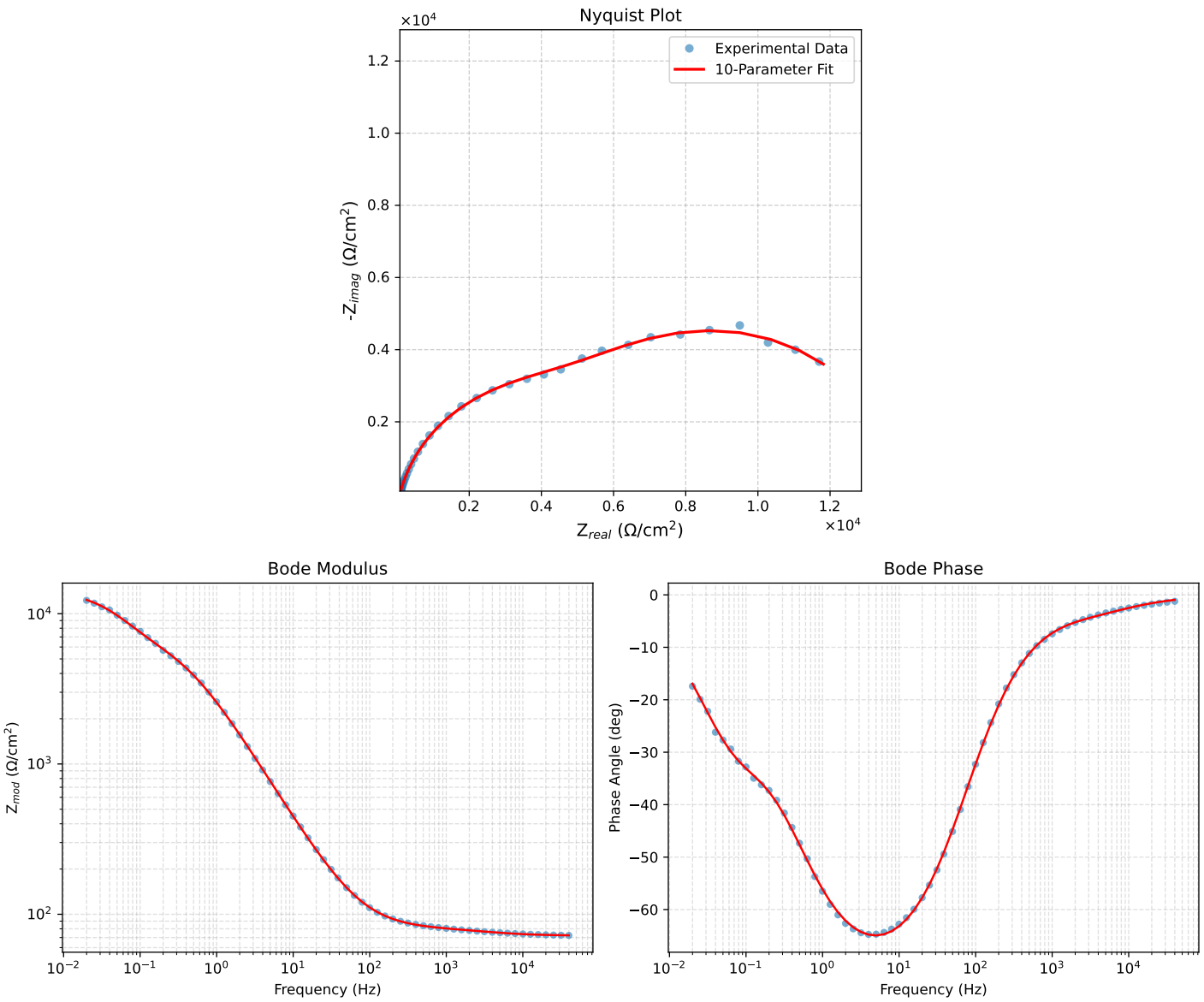

Figure 1: EIS Fit Results for Cauvel_4_NaCl_4H