Comparative EIS Kinetics Report

Model Structure: `R0-p(R1-p(R2-p(R3,CPE3),CPE2),CPE1)`
Used data: original data

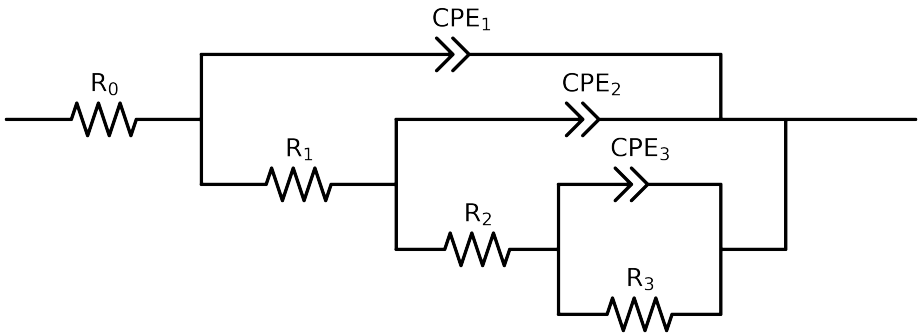

Element	Unit	Bounds	Cauvel_4_NaCl_8H
R_0	Ω	$[1.0e-03, 1.0e+03]$	$7.16e+01 \pm 2.0e-01$
R_1	Ω	$[1.0e+00, 1.0e+08]$	$1.82e+01 \pm 1.4e+00$
R_2	Ω	$[1.0e+00, 1.0e+08]$	$9.34e+03 \pm 9.6e+02$
R_3	Ω	$[1.0e+00, 1.0e+08]$	$2.30e+04 \pm 3.8e+03$
Q_3	$\Omega^{-1}\ \mathrm{sec}^a$	$[1.0e-11, 1.0e-03]$	$2.36e-04 \pm 4.0e-05$
n_3	-	$[5.0e-01, 1.0e+00]$	$5.00e-01 \pm 5.1e-02$
Q_2	$\Omega^{-1}\ \mathrm{sec}^a$	$[1.0e-11, 1.0e-03]$	$2.92e-05 \pm 3.4e-06$
n_2	-	$[5.0e-01, 1.0e+00]$	$9.17e-01 \pm 1.2e-02$
Q_1	$\Omega^{-1}\ \mathrm{sec}^a$	$[1.0e-11, 1.0e-03]$	$6.35e-05 \pm 5.4e-06$
n_1	-	$[5.0e-01, 1.0e+00]$	$7.38e-01 \pm 7.6e-03$
χ^2	-	-	$5.508e-05$

Analysis Results: 8H

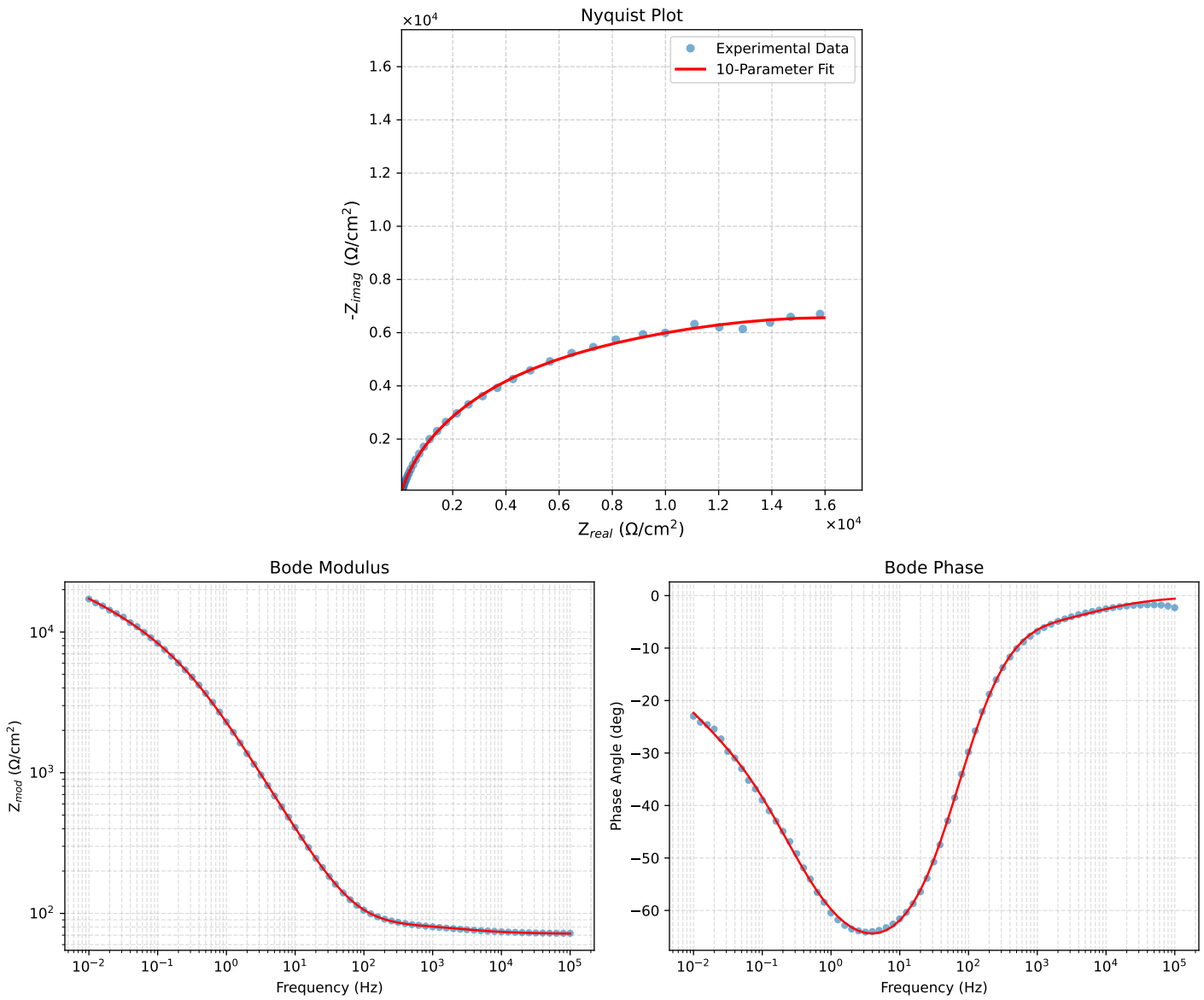

Figure 1: EIS Fit Results for Cauvel_4_NaCl_8H