Comparative EIS Kinetics Report

Model Structure: `R0-p(R1-p(R2,CPE2),CPE1)`
Used data: altered data, first 6 points removed and points with $freq > 1e+04$ and $freq < 1e-03$ removed

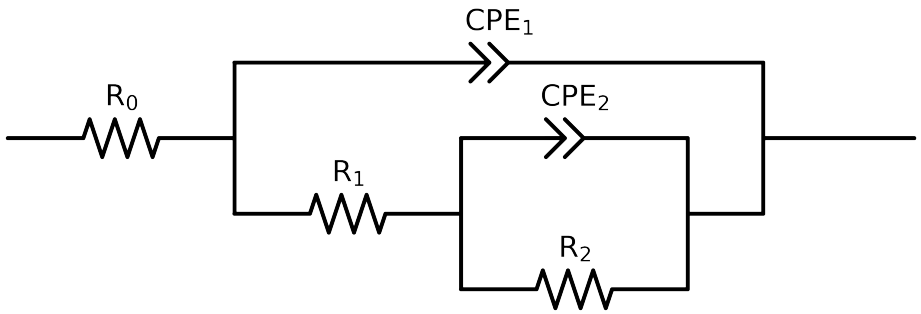

Element	Unit	Bounds	Cauvel_2_8HQ_168H
R_0	Ω	$[1.0e-03, 1.0e+03]$	$7.91e+01 \pm 8.5e-01$
R_1	Ω	$[1.0e+00, 1.0e+08]$	$4.58e+03 \pm 2.7e+02$
R_2	Ω	$[1.0e+00, 1.0e+12]$	$1.46e+04 \pm 2.6e+02$
Q_2	Ω^{-1} sec^a	$[1.0e-11, 1.0e-03]$	$4.81e-05 \pm 2.6e-06$
n_2	-	$[5.0e-01, 1.0e+00]$	$9.26e-01 \pm 2.4e-02$
Q_1	Ω^{-1} sec^a	$[1.0e-11, 1.0e-03]$	$9.09e-05 \pm 2.5e-06$
n_1	-	$[5.0e-01, 1.0e+00]$	$5.35e-01 \pm 3.9e-03$
χ^2	-	-	$1.292e-04$

Analysis Results: 168H

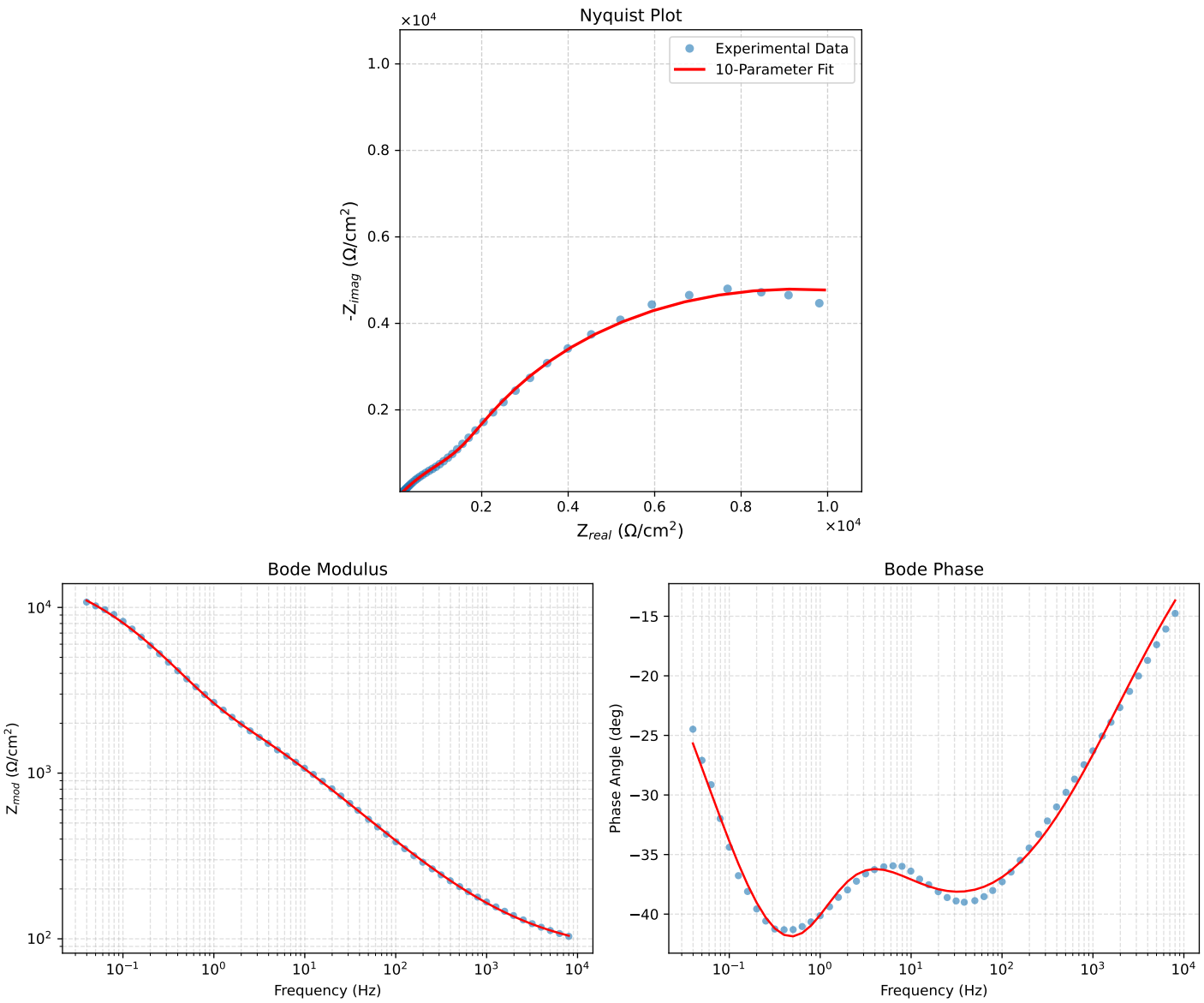

Figure 1: EIS Fit Results for Cauvel_2_8HQ_168H