Comparative EIS Kinetics Report

Model Structure: `R0-p(R1-p(R2,CPE2),CPE1)`
Used data: altered data, first 9 points removed and points with $freq > 2e+04$ and $freq < 1e-03$ removed

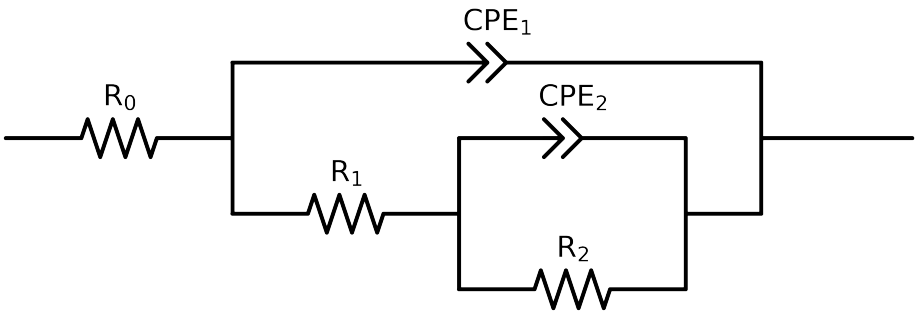

Element	Unit	Bounds	Cauvel_2_8HQ_24H
R_0	Ω	$[1.0e-03, 1.0e+03]$	$6.81e+01 \pm 3.5e-01$
R_1	Ω	$[1.0e+00, 1.0e+08]$	$5.69e+03 \pm 4.1e+02$
R_2	Ω	$[1.0e+00, 1.0e+12]$	$3.31e+04 \pm 5.3e+02$
Q_2	Ω^{-1} sec^a	$[1.0e-11, 1.0e-03]$	$8.30e-06 \pm 5.7e-07$
n_2	-	$[5.0e-01, 1.0e+00]$	$9.84e-01 \pm 2.1e-02$
Q_1	Ω^{-1} sec^a	$[1.0e-11, 1.0e-03]$	$2.04e-05 \pm 5.7e-07$
n_1	-	$[5.0e-01, 1.0e+00]$	$7.98e-01 \pm 3.9e-03$
χ^2	-	-	$2.302e-04$

Analysis Results: 24H

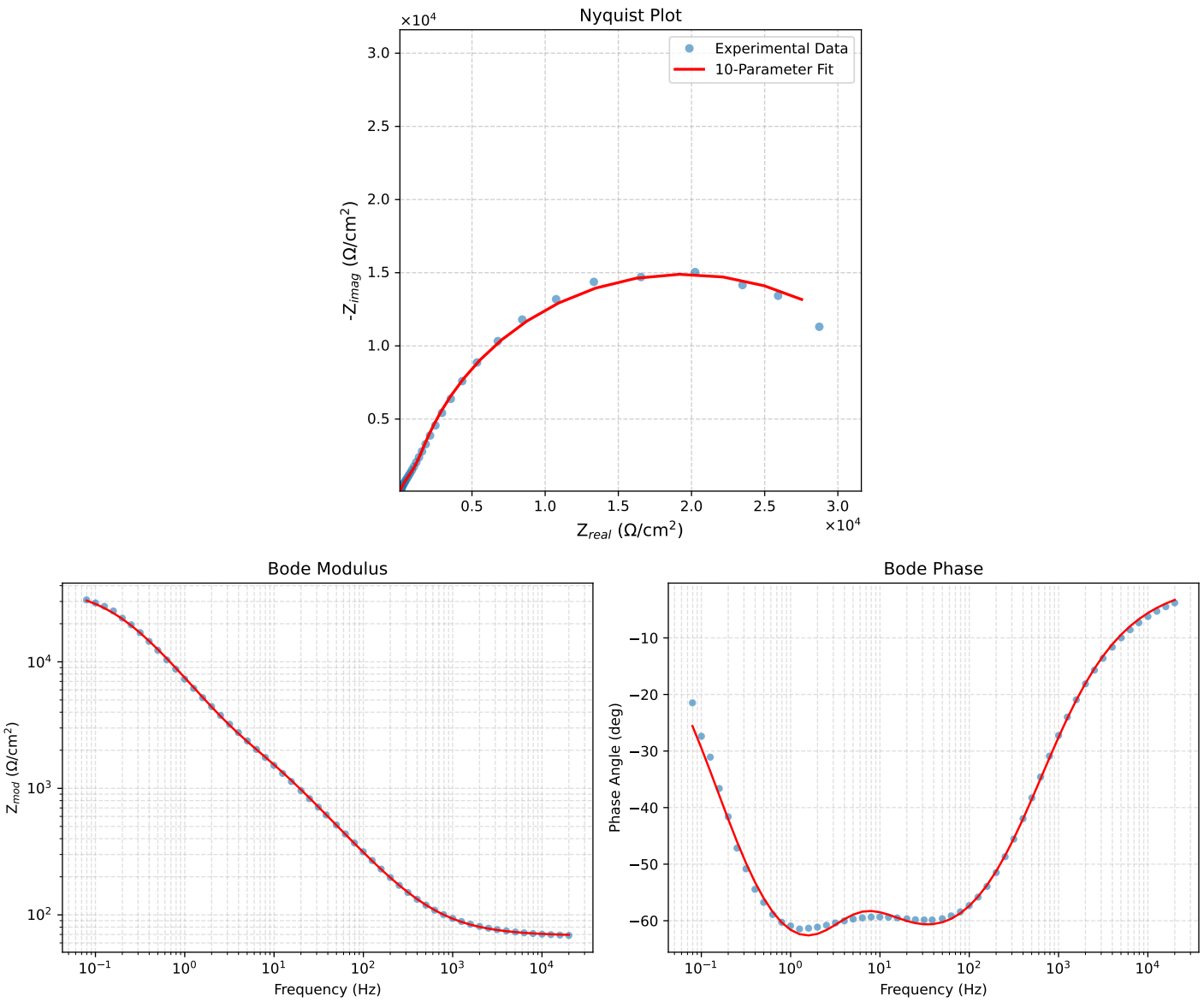

Figure 1: EIS Fit Results for Cauvel_2_8HQ_24H