Comparative EIS Kinetics Report

Model Structure: `R0-p(R1-p(R2,CPE2),CPE1)`
Used data: original data

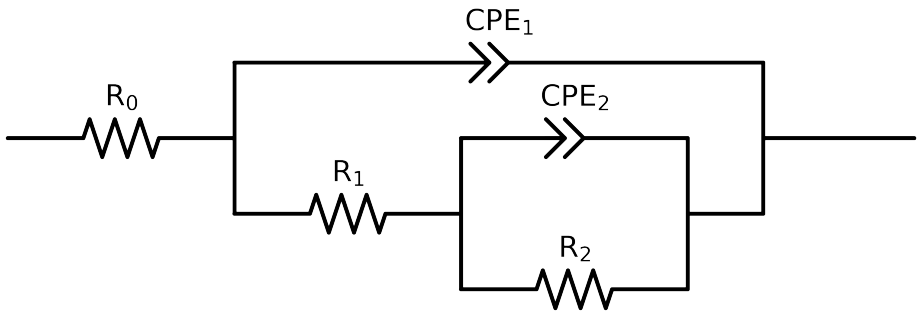

Element	Unit	Bounds	Cauvel_2_8HQ_4H	Cauvel_2_8HQ_8H	Cauvel_2_8HQ_24H
R_0	Ω	$[1.0e-03, 1.0e+03]$	$6.20e+01 \pm 6.0e-01$	$6.29e+01 \pm 4.6e-01$	$6.82e+01 \pm 4.5e-01$
R_1	Ω	$[1.0e+00, 1.0e+08]$	$4.25e+04 \pm 8.0e+04$	$3.83e+03 \pm 9.7e+02$	$4.92e+03 \pm 4.8e+02$
R_2	Ω	$[1.0e+00, 1.0e+12]$	$2.85e+02 \pm 7.9e+04$	$3.78e+04 \pm 9.4e+02$	$2.94e+04 \pm 5.1e+02$
Q_2	Ω^{-1} sec^a	$[1.0e-11, 1.0e-03]$	$7.80e-05 \pm 2.2e-02$	$3.20e-06 \pm 9.3e-07$	$8.92e-06 \pm 8.5e-07$
n_2	-	$[5.0e-01, 1.0e+00]$	$9.99e-01 \pm 5.5e+01$	$1.00e+00 \pm 5.6e-02$	$1.00e+00 \pm 2.9e-02$
Q_1	Ω^{-1} sec^a	$[1.0e-11, 1.0e-03]$	$1.42e-05 \pm 1.1e-06$	$1.27e-05 \pm 9.7e-07$	$1.87e-05 \pm 8.3e-07$
n_1	-	$[5.0e-01, 1.0e+00]$	$8.85e-01 \pm 1.1e-02$	$8.89e-01 \pm 1.0e-02$	$8.10e-01 \pm 6.2e-03$
χ^2	-	-	$1.693e-03$	$9.352e-04$	$6.921e-04$

Analysis Results: 4H

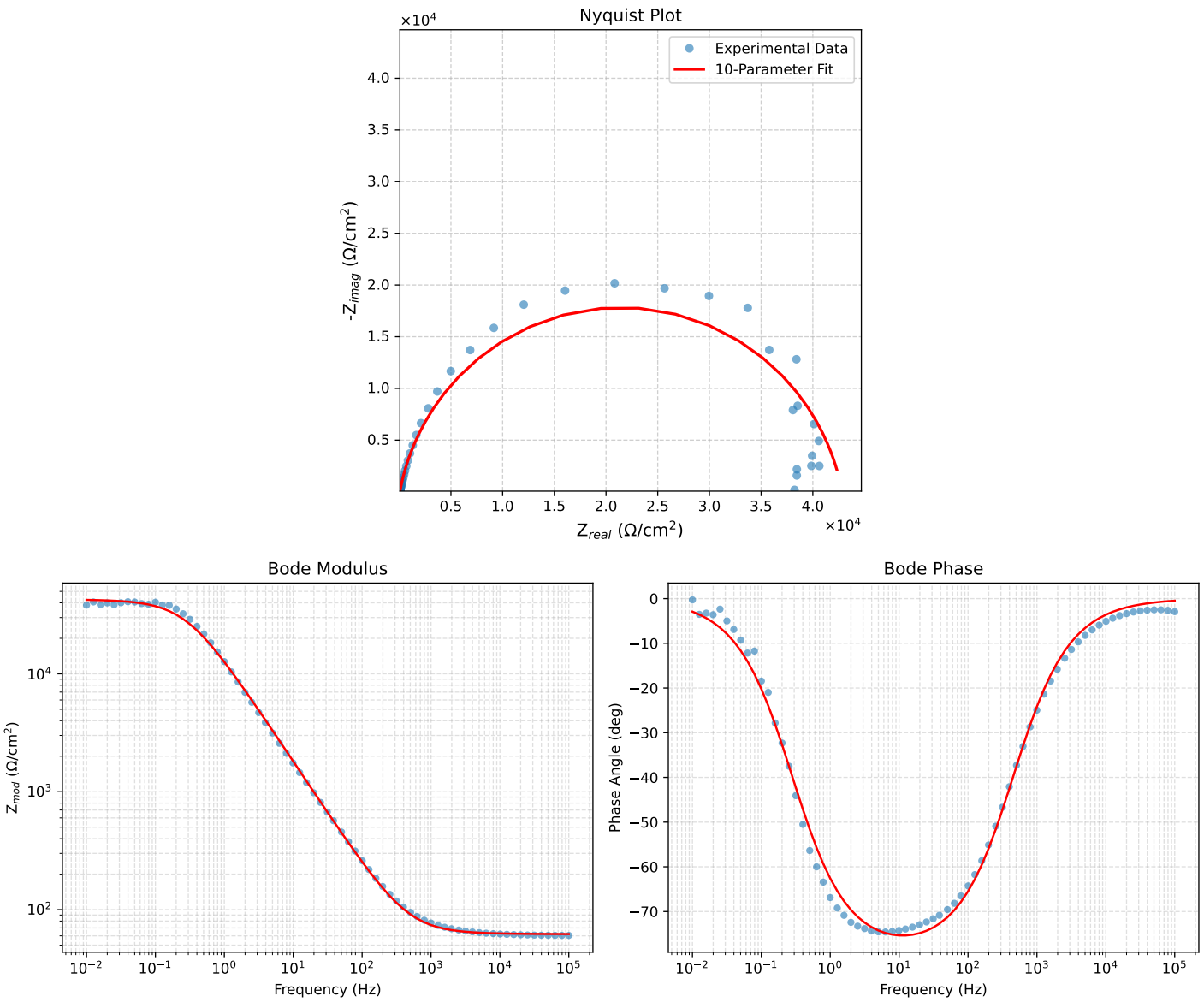

Figure 1: EIS Fit Results for Cauvel_2_8HQ_4H

Analysis Results: 8H

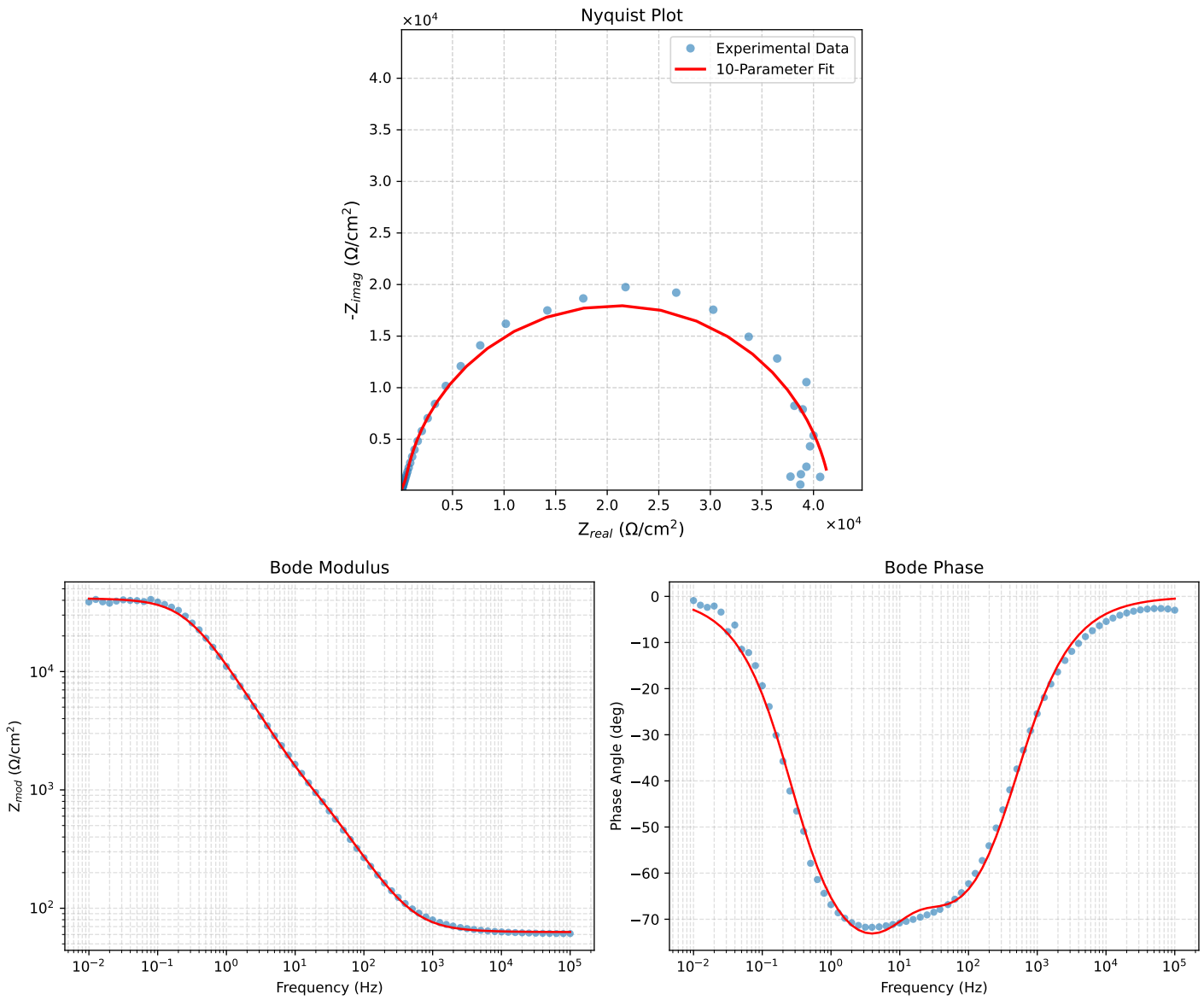

Figure 2: EIS Fit Results for Cauvel_2_8HQ_8H

Analysis Results: 24H

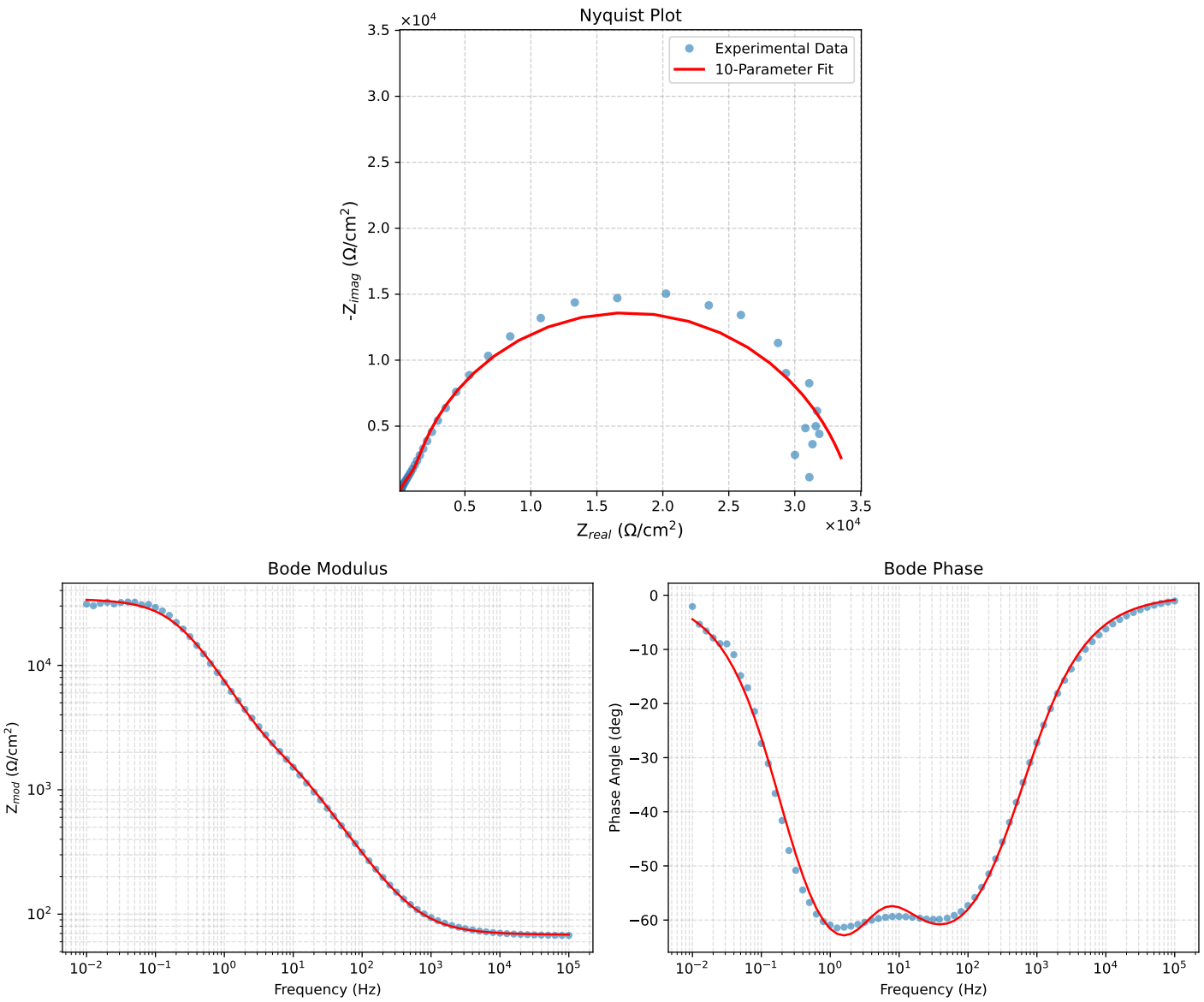

Figure 3: EIS Fit Results for Cauvel_2_8HQ_24H