Comparative EIS Kinetics Report

Model Structure: `R0-p(R1-p(R2,CPE2),CPE1)`
Used data: original data

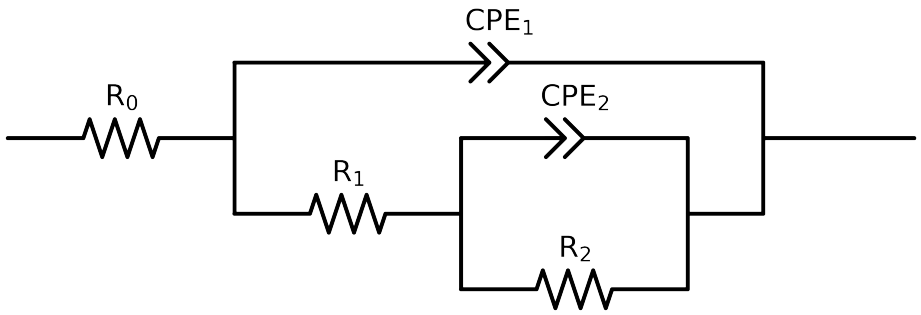

Element	Unit	Bounds	Cauvel_3_BTA_24H	Cauvel_3_BTA_48H	Cauvel_3_BTA_72H	Cauvel_3_BTA_168H
R_0	Ω	$[1.0e-03, 1.0e+03]$	$7.91e+01 \pm 3.9e-01$	$8.21e+01 \pm 4.8e-01$	$8.82e+01 \pm 2.5e+00$	$8.48e+01 \pm 4.1e-01$
R_1	Ω	$[1.0e+00, 1.0e+08]$	$1.49e+04 \pm 1.5e+03$	$7.69e+03 \pm 4.4e+02$	$1.75e+00 \pm 5.5e+04$	$3.97e+03 \pm 1.0e+02$
R_2	Ω	$[1.0e+00, 1.0e+08]$	$4.92e+04 \pm 1.6e+03$	$4.54e+04 \pm 9.0e+02$	$5.97e+04 \pm 5.6e+04$	$2.49e+04 \pm 4.8e+02$
Q_2	Ω^{-1} sec^a	$[1.0e-11, 1.0e-03]$	$6.18e-06 \pm 3.8e-07$	$2.30e-05 \pm 4.8e-07$	$3.58e-05 \pm 6.9e-05$	$8.06e-05 \pm 1.1e-06$
n_2	-	$[5.0e-01, 1.0e+00]$	$9.81e-01 \pm 3.0e-02$	$7.97e-01 \pm 1.5e-02$	$5.13e-01 \pm 3.6e-02$	$7.14e-01 \pm 1.0e-02$
Q_1	Ω^{-1} sec^a	$[1.0e-11, 1.0e-03]$	$1.38e-05 \pm 3.6e-07$	$1.14e-05 \pm 3.4e-07$	$3.55e-06 \pm 6.7e-05$	$1.08e-05 \pm 2.8e-07$
n_1	-	$[5.0e-01, 1.0e+00]$	$8.45e-01 \pm 3.9e-03$	$8.64e-01 \pm 4.5e-03$	$9.85e-01 \pm 1.1e+00$	$8.68e-01 \pm 3.8e-03$
χ^2	-	-	$4.240e-04$	$6.171e-04$	$2.345e-03$	$4.409e-04$

Analysis Results: 24H

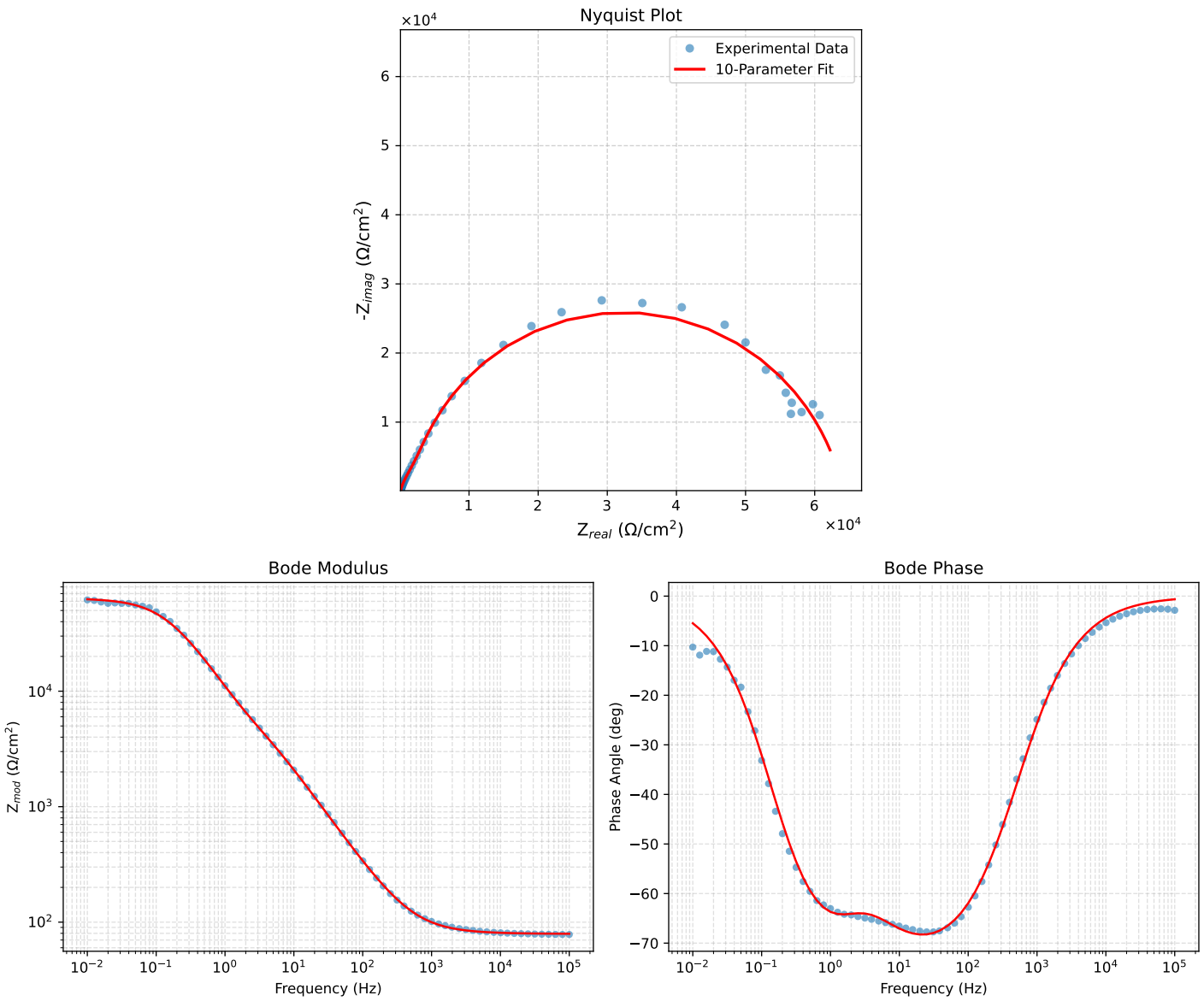

Figure 1: EIS Fit Results for Cauvel_3_BTA_24H

Analysis Results: 48H

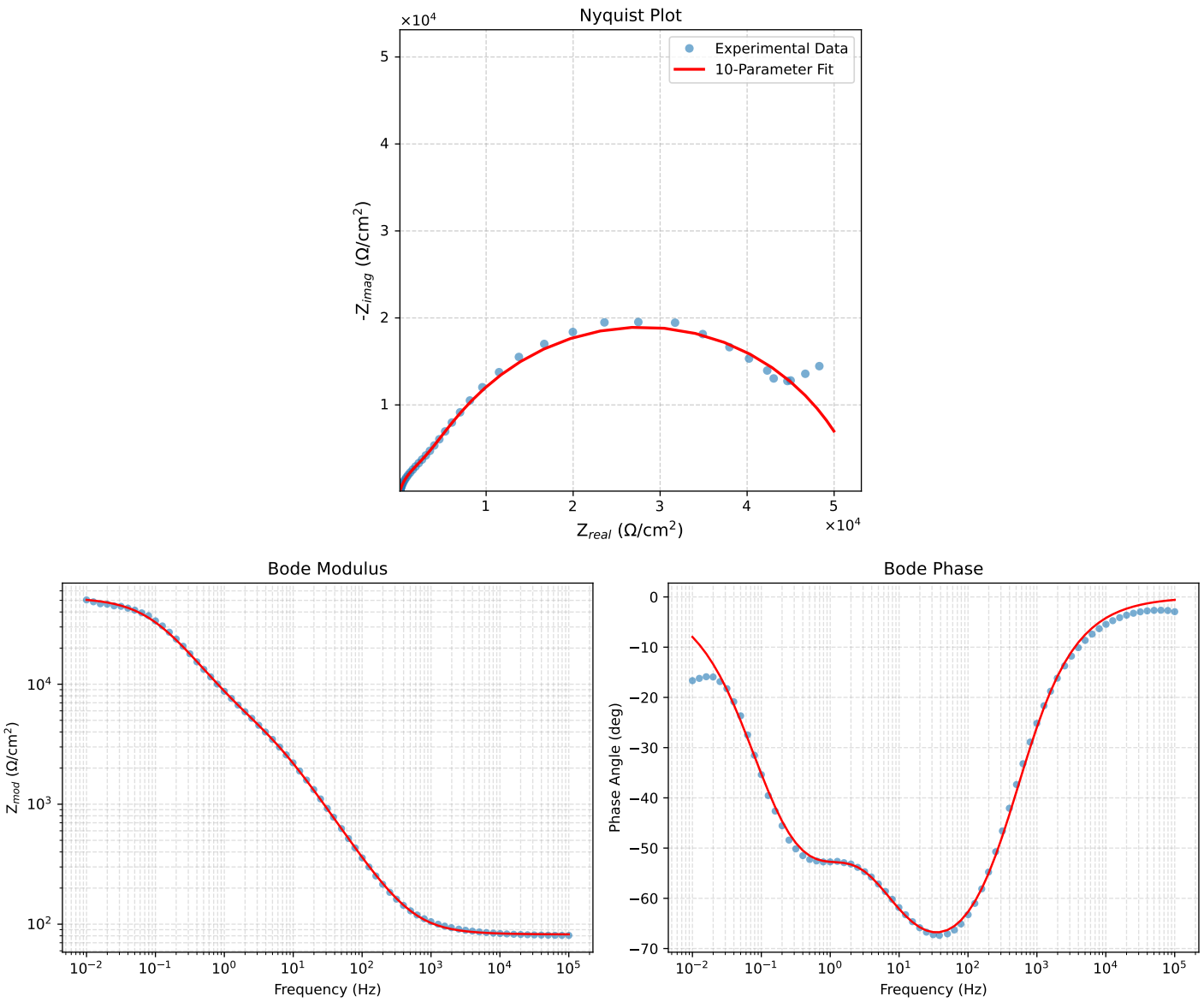

Figure 2: EIS Fit Results for Cauvel_3_BTA_48H

Analysis Results: 72H

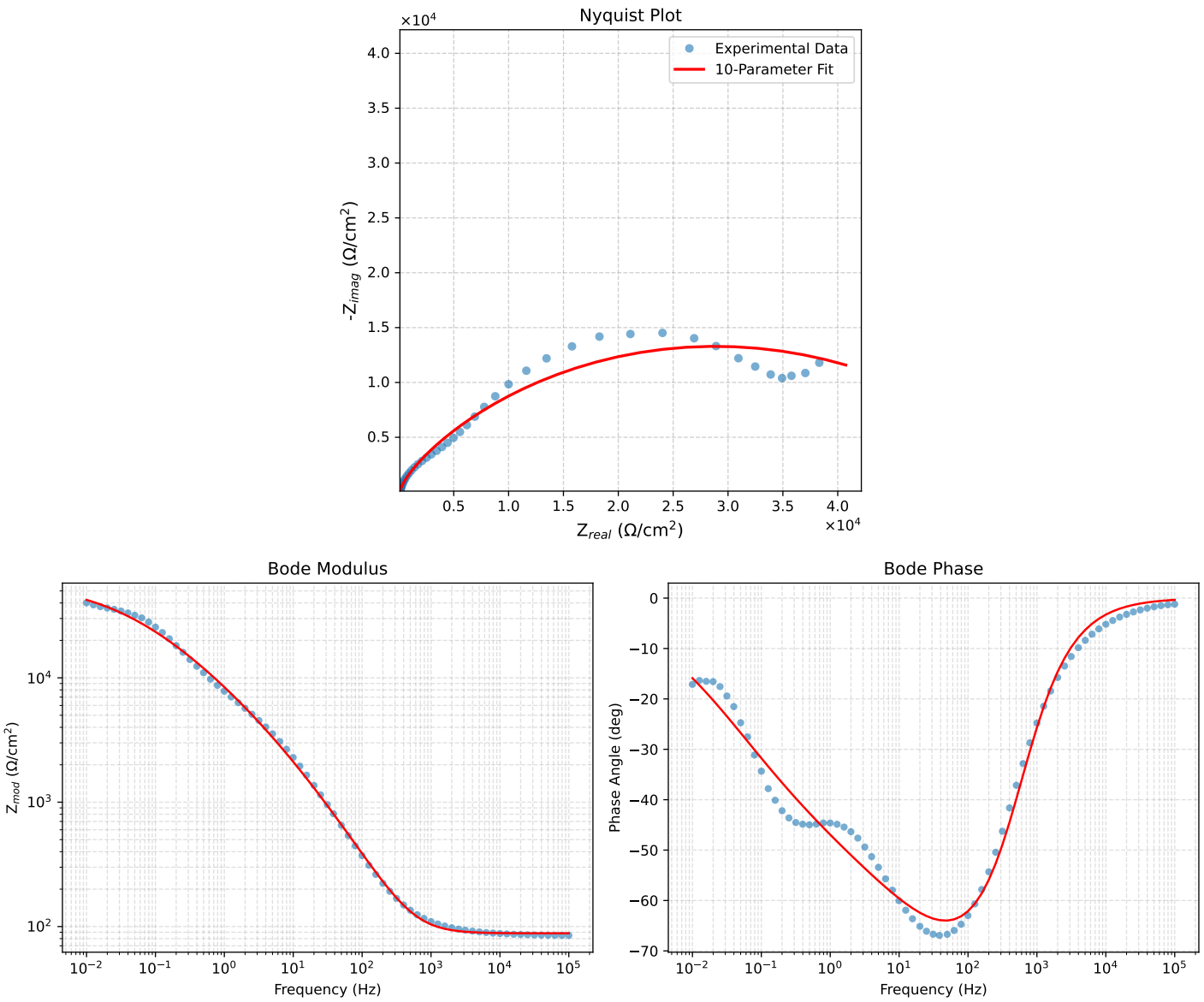

Figure 3: EIS Fit Results for Cauvel_3_BTA_72H

Analysis Results: 168H

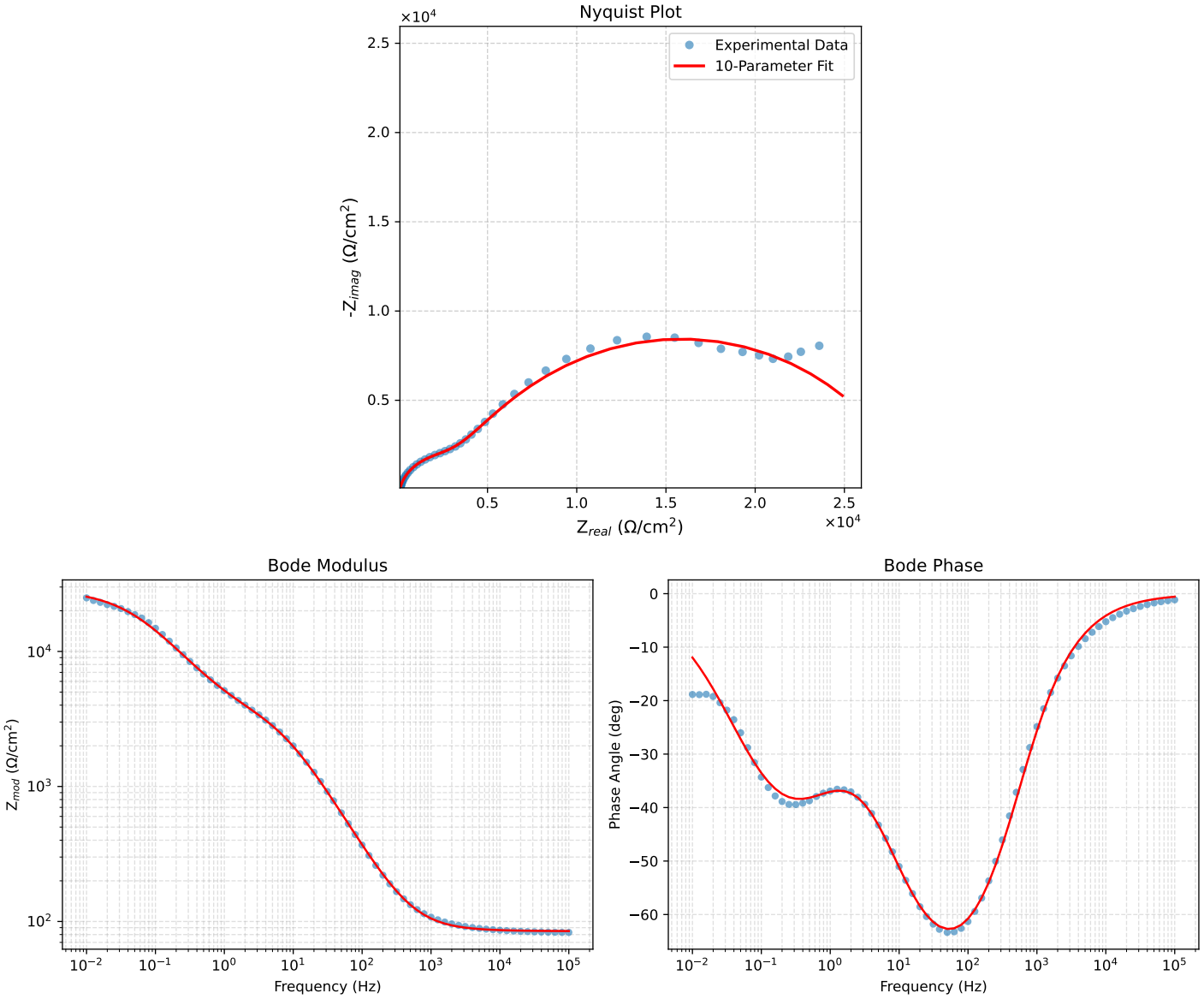

Figure 4: EIS Fit Results for Cauvel_3_BTA_168H