Comparative EIS Kinetics Report

Model Structure: `R0-p(R1-p(R2,CPE2),CPE1)`
Used data: altered data, first 3 points removed and points with $freq > 2e+04$ removed

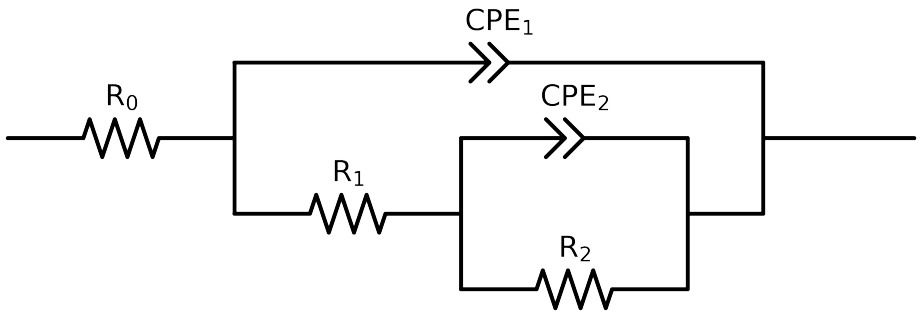

Element	Unit	Bounds	Cauvel_3_BTA_24H	Cauvel_3_BTA_48H	Cauvel_3_BTA_72H	Cauvel_3_BTA_168H
R_0	Ω	$[1.0e-03, 1.0e+03]$	$8.01e+01 \pm 3.9e-01$	$8.32e+01 \pm 3.5e-01$	$8.74e+01 \pm 3.2e-01$	$6.13e+01 \pm 5.2e+00$
R_1	Ω	$[1.0e+00, 1.0e+08]$	$1.36e+04 \pm 1.0e+03$	$7.97e+03 \pm 2.4e+02$	$7.47e+03 \pm 1.5e+02$	$4.14e+01 \pm 9.5e+00$
R_2	Ω	$[1.0e+00, 1.0e+08]$	$5.06e+04 \pm 1.1e+03$	$4.40e+04 \pm 5.5e+02$	$3.44e+04 \pm 4.5e+02$	$3.59e+04 \pm 3.6e+03$
Q_2	Ω^{-1} sec^a	$[1.0e-11, 1.0e-03]$	$6.46e-06 \pm 2.9e-07$	$2.25e-05 \pm 2.6e-07$	$3.89e-05 \pm 3.9e-07$	$2.49e-06 \pm 1.0e-06$
n_2	-	$[5.0e-01, 1.0e+00]$	$9.67e-01 \pm 2.1e-02$	$8.30e-01 \pm 8.8e-03$	$8.03e-01 \pm 8.2e-03$	$1.00e+00 \pm 4.5e-02$
Q_1	Ω^{-1} sec^a	$[1.0e-11, 1.0e-03]$	$1.33e-05 \pm 2.8e-07$	$1.13e-05 \pm 1.9e-07$	$1.08e-05 \pm 1.5e-07$	$5.88e-05 \pm 2.3e-06$
n_1	-	$[5.0e-01, 1.0e+00]$	$8.51e-01 \pm 3.2e-03$	$8.66e-01 \pm 2.5e-03$	$8.67e-01 \pm 2.2e-03$	$5.00e-01 \pm 2.5e-02$
χ^2	-	-	$2.431e-04$	$1.871e-04$	$1.610e-04$	$4.941e-03$

Analysis Results: 24H

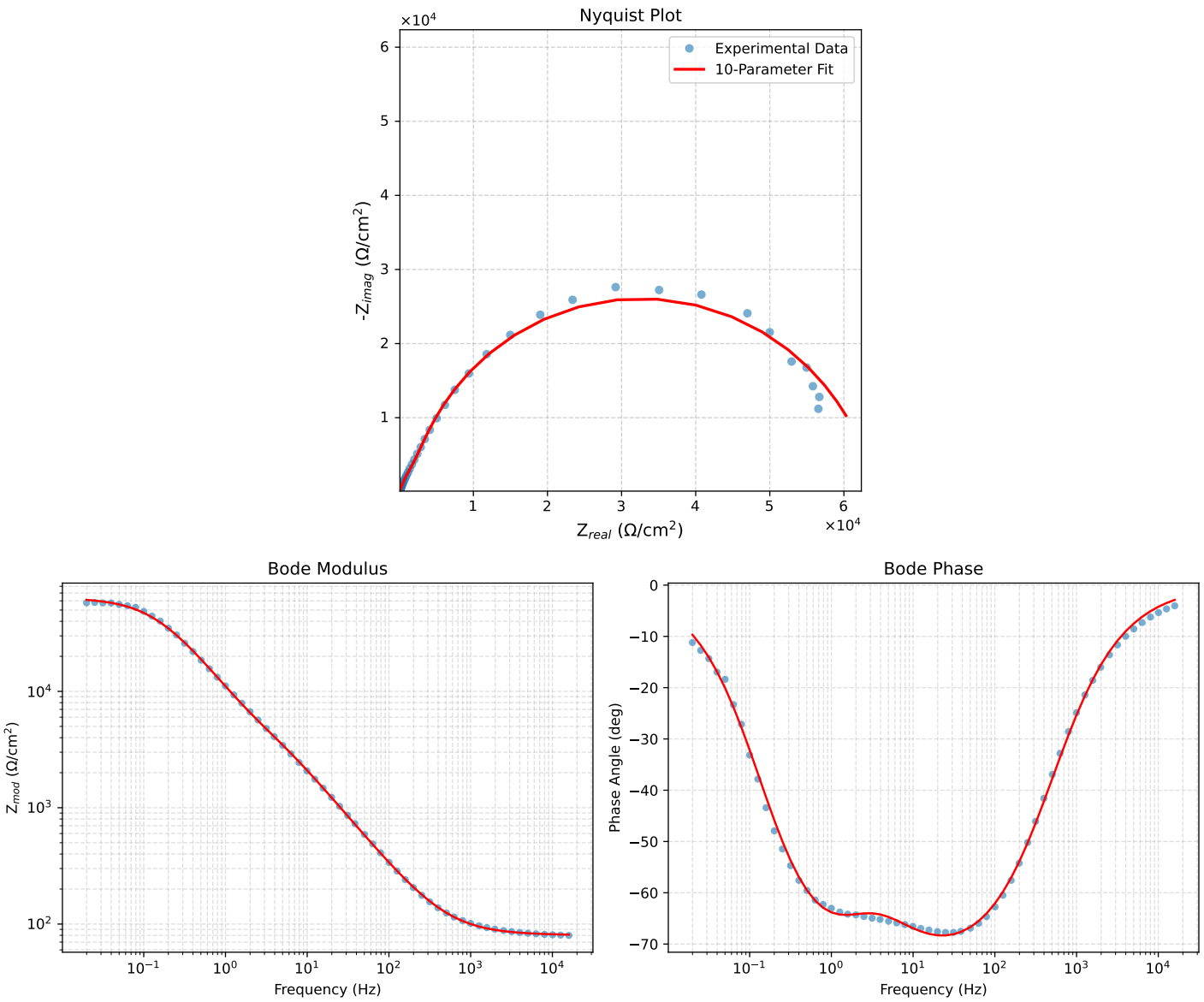

Figure 1: EIS Fit Results for Cauvel_3_BTA_24H

Analysis Results: 48H

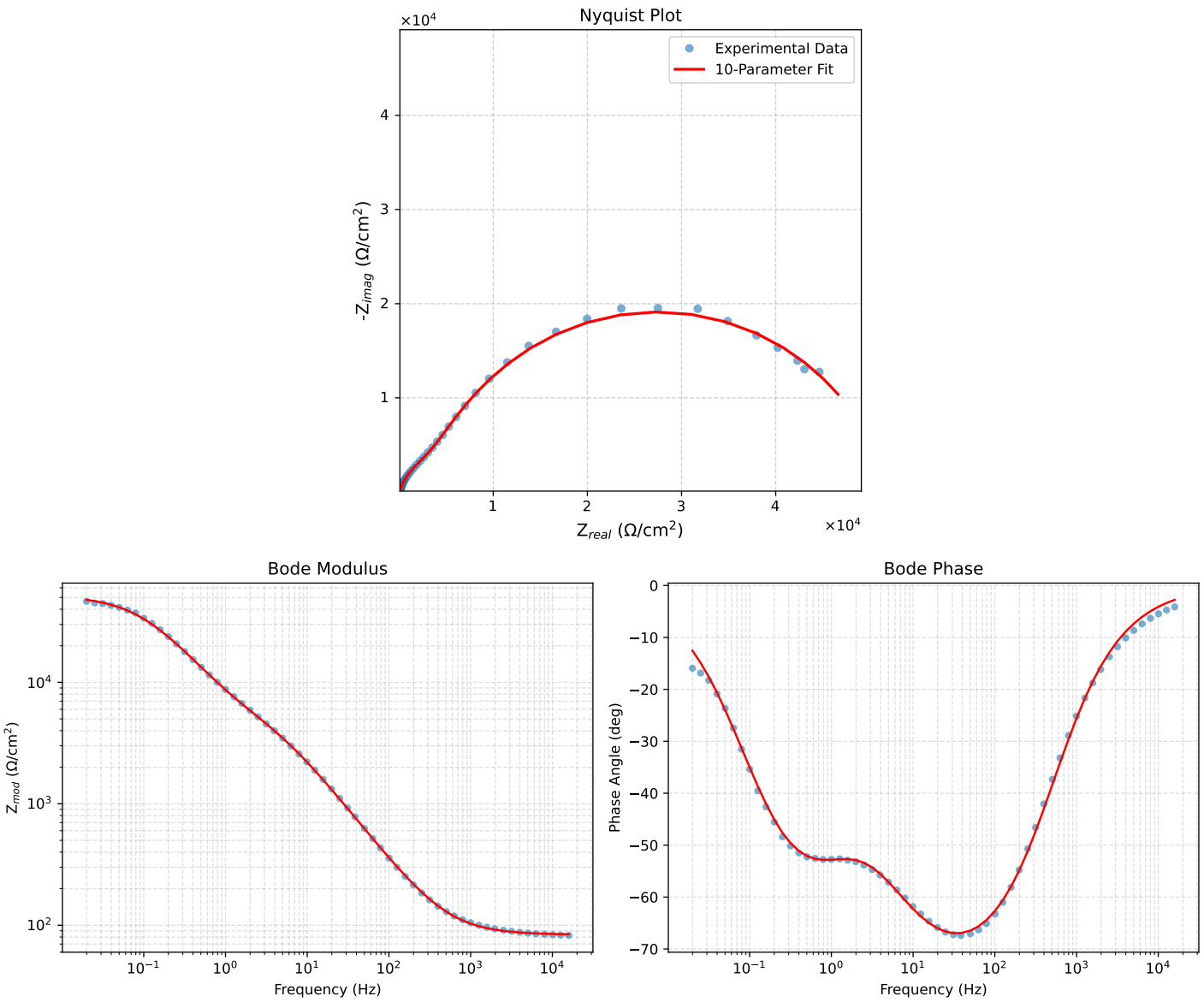

Figure 2: EIS Fit Results for Cauvel_3_BTA_48H

Analysis Results: 72H

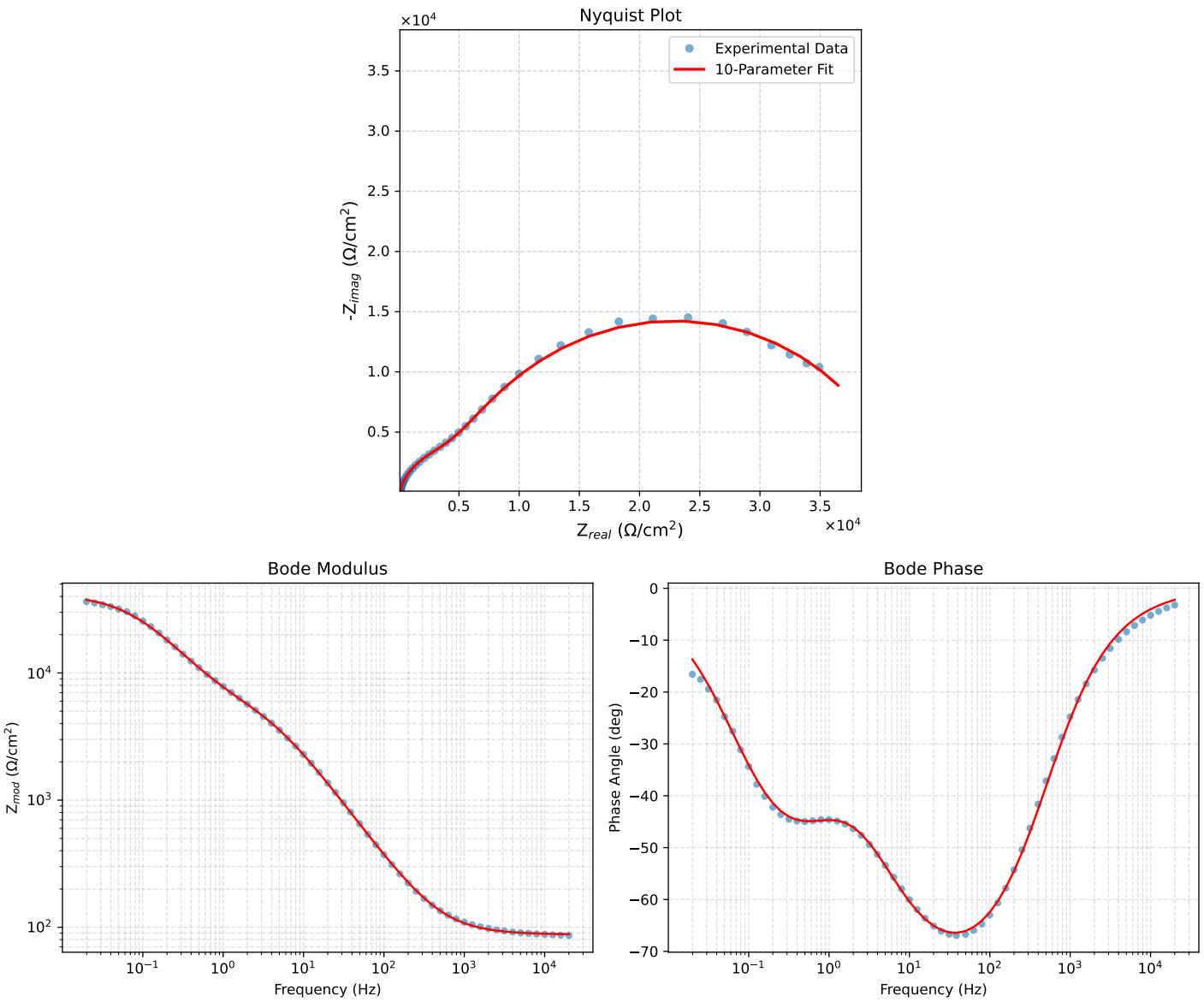

Figure 3: EIS Fit Results for Cauvel_3_BTA_72H

Analysis Results: 168H

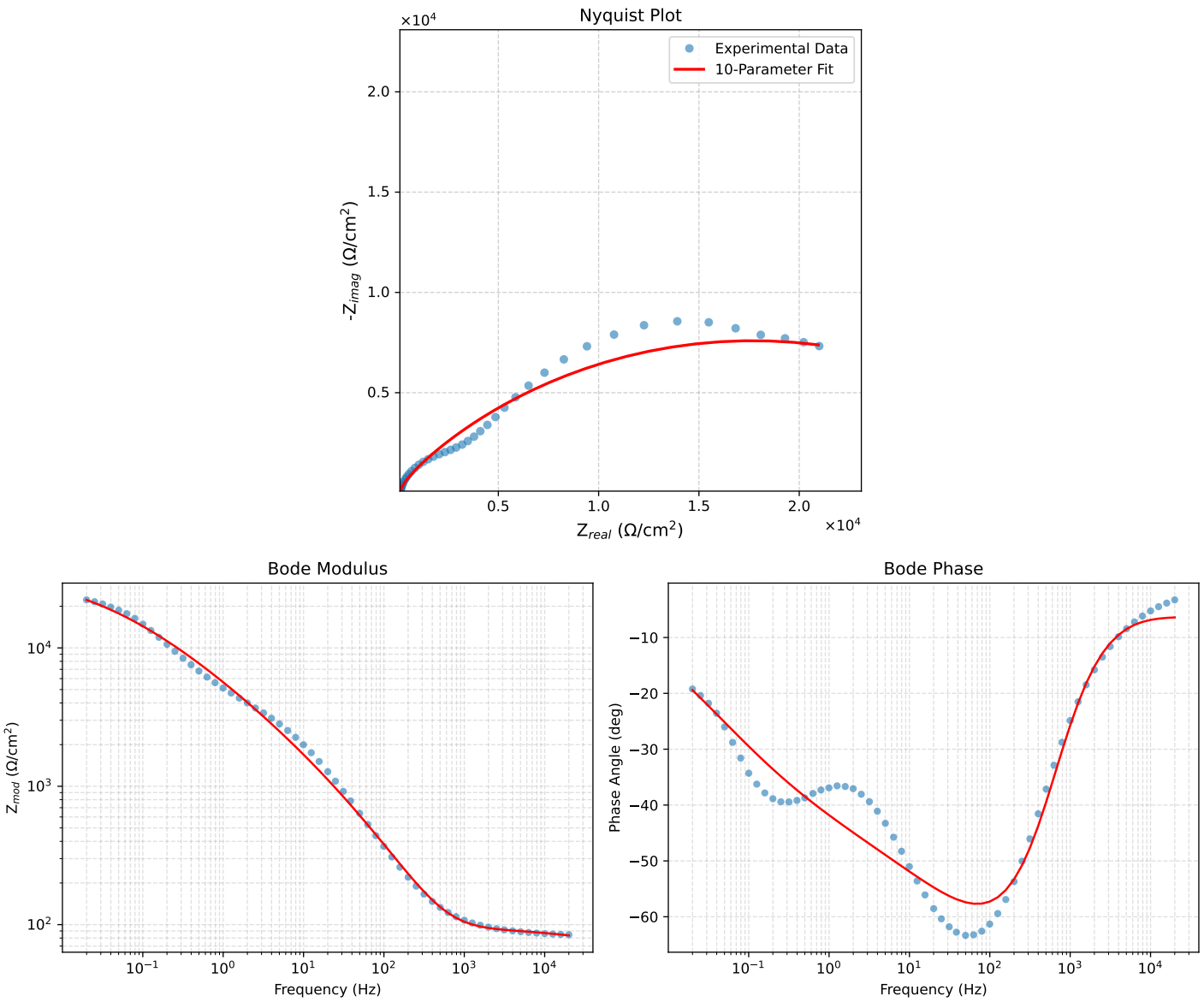

Figure 4: EIS Fit Results for Cauvel_3_BTA_168H