Comparative EIS Kinetics Report

Model Structure: `R0-p(R1-p(R2,CPE2),CPE1)`
Used data: altered data, first 0 points removed and points with $freq > 2e+05$ and $freq < 1e-01$ removed

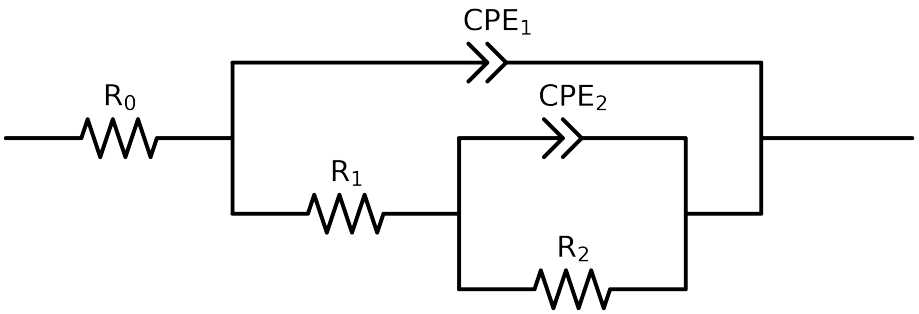

Element	Unit	Bounds	Cauvel_3_BTA_8H
R_0	Ω	$[1.0e-03, 1.0e+03]$	$7.55e+01 \pm 3.1e-01$
R_1	Ω	$[1.0e+00, 1.0e+08]$	$3.15e+04 \pm 7.4e+03$
R_2	Ω	$[1.0e+00, 1.0e+08]$	$5.33e+04 \pm 7.5e+03$
Q_2	Ω^{-1} sec^a	$[1.0e-11, 1.0e-03]$	$2.08e-06 \pm 2.9e-07$
n_2	-	$[5.0e-01, 1.0e+00]$	$1.00e+00 \pm 8.0e-02$
Q_1	Ω^{-1} sec^a	$[1.0e-11, 1.0e-03]$	$1.13e-05 \pm 2.8e-07$
n_1	-	$[5.0e-01, 1.0e+00]$	$8.79e-01 \pm 3.6e-03$
χ^2	-	-	$3.033e-04$

Analysis Results: 8H

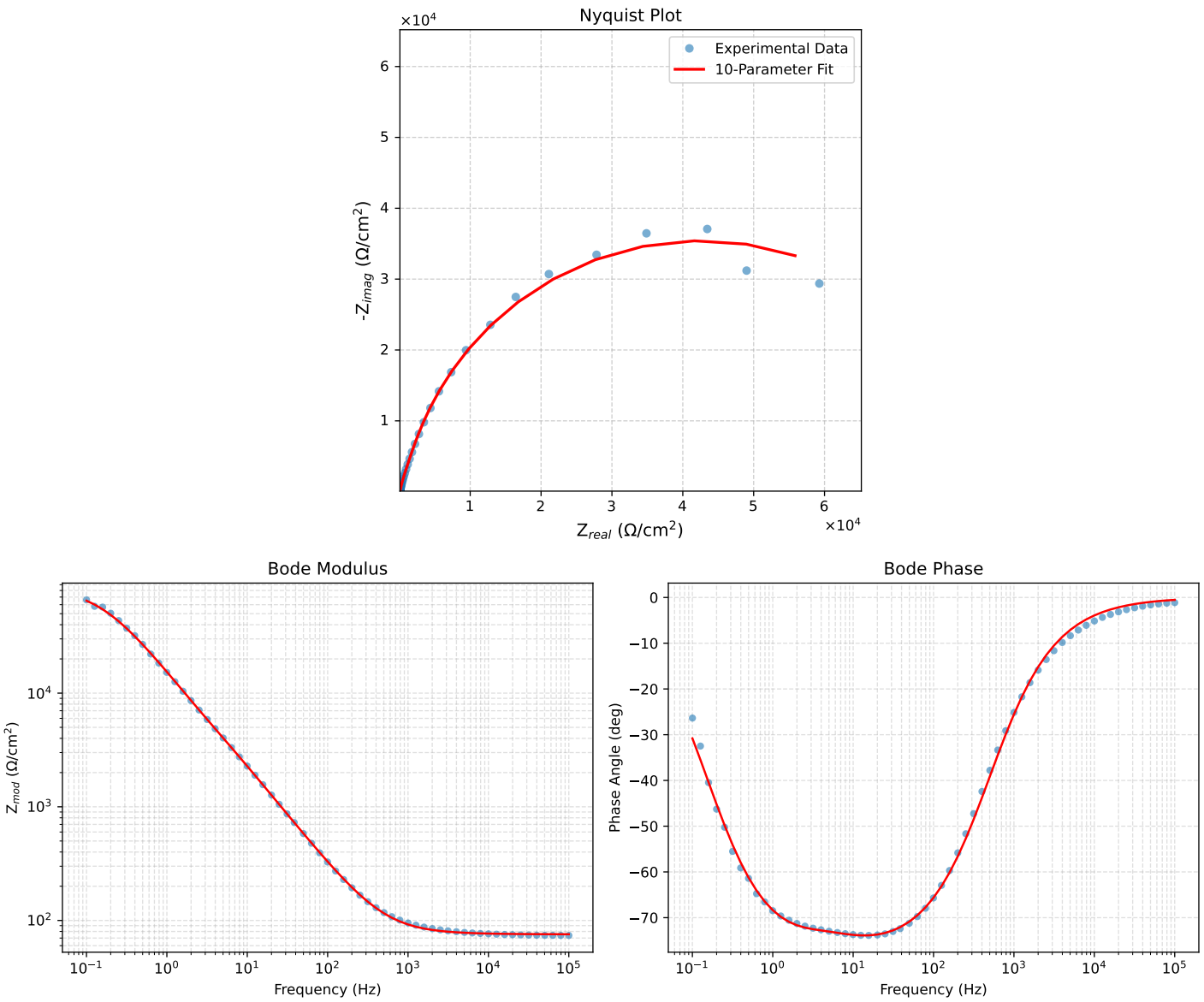

Figure 1: EIS Fit Results for Cauvel_3_BTA_8H