Comparative EIS Kinetics Report

Model Structure: `R0-p(R1-p(R2,CPE2),CPE1)`
Used data: altered data, first 6 points removed and points with $freq > 2e+04$ removed

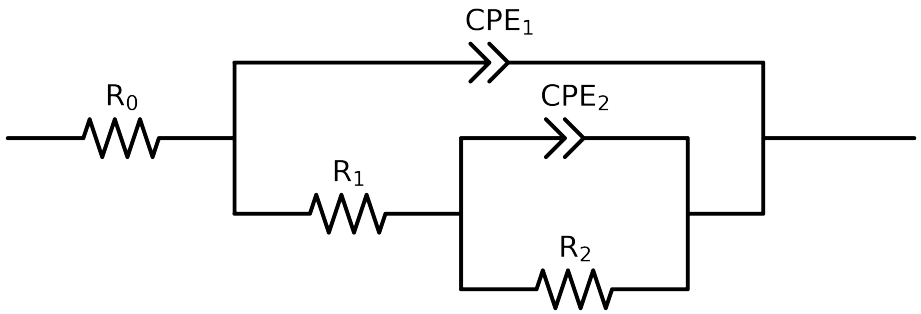

Element	Unit	Bounds	Cauvel_4_NaVO3_1H	Cauvel_4_NaVO3_4H	Cauvel_4_NaVO3_8H
R_0	Ω	$[1.0e-03, 1.0e+03]$	$5.34e-03 \pm 3.8e+02$	$6.38e+01 \pm 4.2e-01$	$6.59e+01 \pm 4.0e-01$
R_1	Ω	$[1.0e+00, 1.0e+08]$	$7.50e+01 \pm 3.8e+02$	$1.57e+02 \pm 1.4e+02$	$2.91e+05 \pm 2.0e+03$
R_2	Ω	$[1.0e+00, 1.0e+08]$	$1.79e+05 \pm 3.6e+03$	$2.38e+05 \pm 2.1e+03$	$1.97e+04 \pm 2.0e+03$
Q_2	Ω^{-1} sec^a	$[1.0e-11, 1.0e-03]$	$8.30e-06 \pm 6.9e-07$	$2.38e-06 \pm 3.1e-06$	$1.01e-11 \pm 2.8e-05$
n_2	-	$[5.0e-01, 1.0e+00]$	$8.98e-01 \pm 5.5e-03$	$8.74e-01 \pm 9.7e-02$	$9.47e-01 \pm 2.9e+05$
Q_1	Ω^{-1} sec^a	$[1.0e-11, 1.0e-03]$	$9.02e-08 \pm 7.4e-07$	$6.76e-06 \pm 3.1e-06$	$9.60e-06 \pm 1.2e-07$
n_1	-	$[5.0e-01, 1.0e+00]$	$7.85e-01 \pm 3.5e-01$	$8.87e-01 \pm 3.9e-02$	$8.68e-01 \pm 2.7e-03$
χ^2	-	-	$5.662e-04$	$1.756e-04$	$2.785e-04$

Analysis Results: 1H

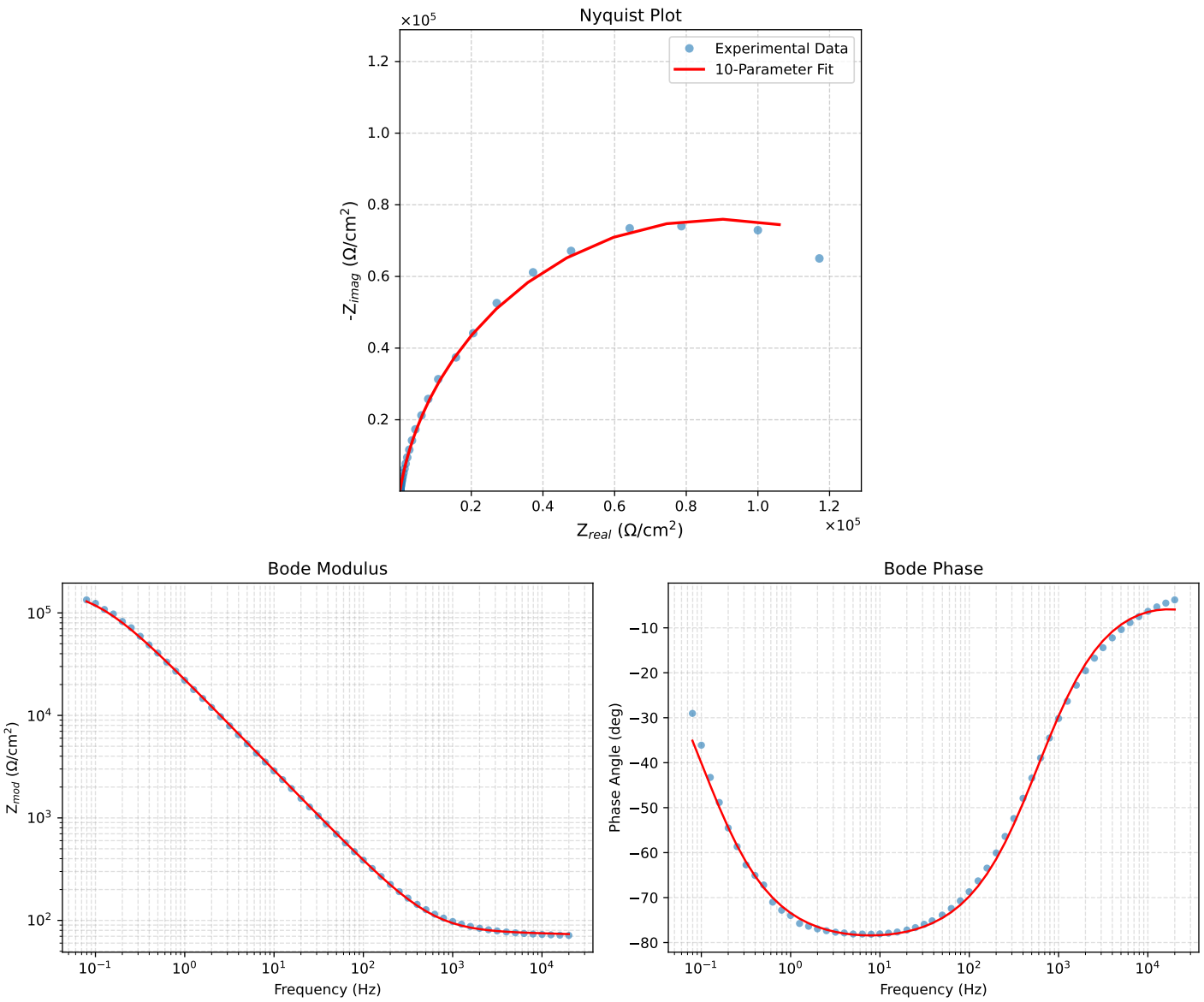

Figure 1: EIS Fit Results for Cauvel_4_NaVO3_1H

Analysis Results: 4H

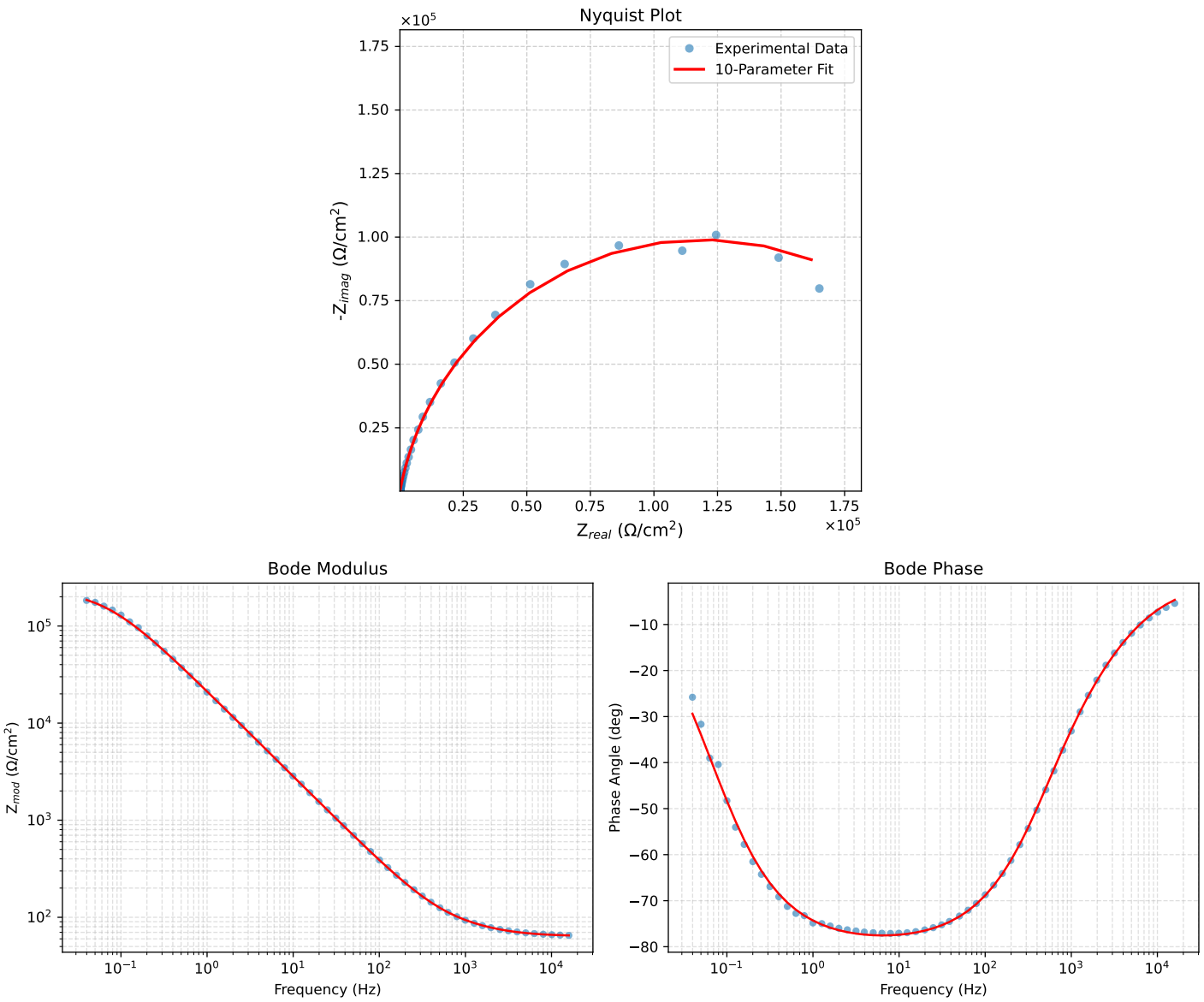

Figure 2: EIS Fit Results for Cauvel_4_NaVO3_4H

Analysis Results: 8H

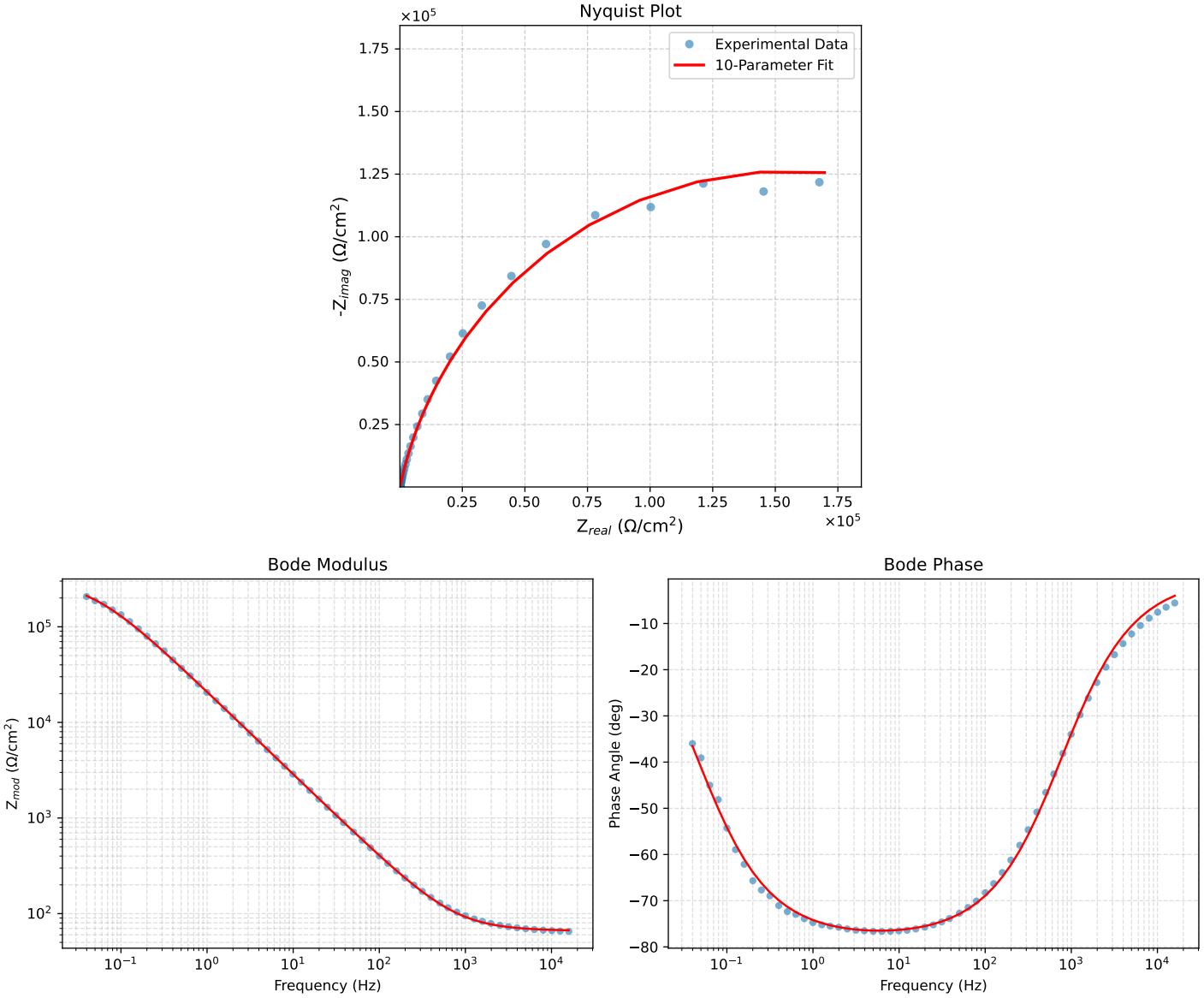

Figure 3: EIS Fit Results for Cauvel_4_NaVO3_8H