Comparative EIS Kinetics Report

Model Structure: `R0-p(R1-p(R2,CPE2),CPE1)`
Used data: original data

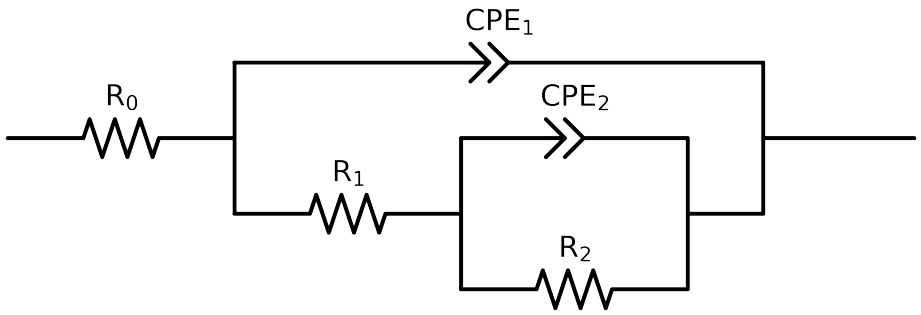

Element	Unit	Bounds	Cauvel_4_NaVO3_24H	Cauvel_4_NaVO3_48H	Cauvel_4_NaVO3_72H	Cauvel_4_NaVO3_168H
R_0	Ω	$[1.0e-03, 1.0e+03]$	$6.60e+01 \pm 2.5e-01$	$6.85e+01 \pm 1.8e-01$	$6.58e+01 \pm 1.2e-01$	$7.01e+01 \pm 6.9e-01$
R_1	Ω	$[1.0e+00, 1.0e+08]$	$3.08e+05 \pm 5.7e+03$	$3.07e+05 \pm 3.3e+03$	$3.21e+05 \pm 2.7e+03$	$4.02e+02 \pm 4.3e+04$
R_2	Ω	$[1.0e+00, 1.0e+08]$	$1.84e+05 \pm 7.9e+04$	$1.00e+08 \pm 2.4e-04$	$9.98e+05 \pm 5.0e+00$	$4.99e+05 \pm 4.9e+04$
Q_2	Ω^{-1} sec^a	$[1.0e-11, 1.0e-03]$	$1.77e-04 \pm 6.4e-05$	$2.34e-04 \pm 3.0e-05$	$1.34e-04 \pm 1.1e-05$	$3.64e-06 \pm 1.1e-06$
n_2	-	$[5.0e-01, 1.0e+00]$	$1.00e+00 \pm 1.3e-01$	$1.00e+00 \pm 4.7e-02$	$9.14e-01 \pm 2.8e-02$	$5.00e-01 \pm 5.6e-02$
Q_1	Ω^{-1} sec^a	$[1.0e-11, 1.0e-03]$	$1.04e-05 \pm 5.3e-08$	$1.09e-05 \pm 3.5e-08$	$1.07e-05 \pm 2.4e-08$	$8.94e-06 \pm 6.0e-07$
n_1	-	$[5.0e-01, 1.0e+00]$	$8.49e-01 \pm 1.0e-03$	$8.38e-01 \pm 6.5e-04$	$8.38e-01 \pm 4.4e-04$	$8.53e-01 \pm 2.1e-02$
χ^2	-	-	$2.623e-04$	$1.279e-04$	$5.777e-05$	$5.102e-04$

Analysis Results: 24H

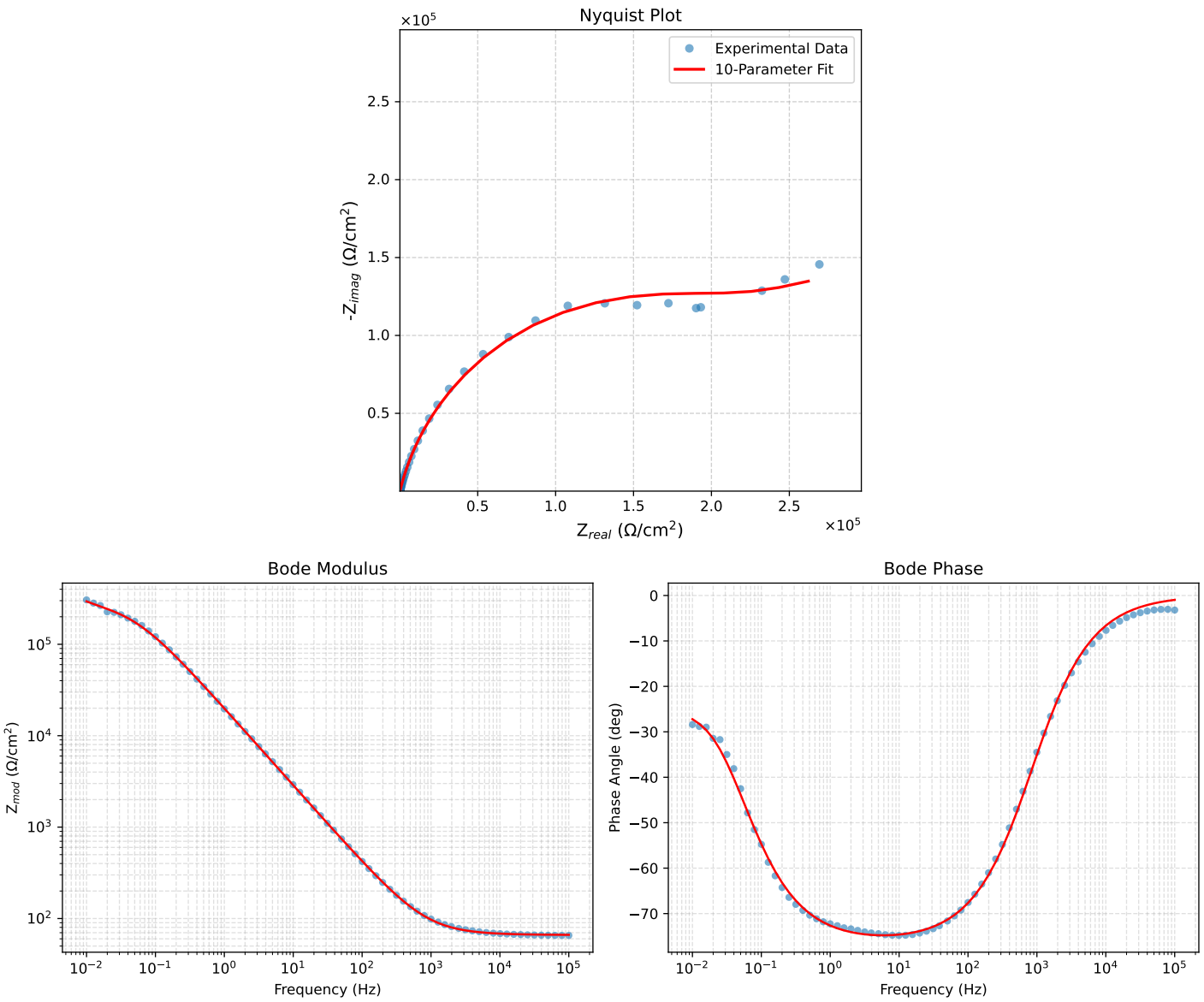

Figure 1: EIS Fit Results for Cauvel_4_NaVO3_24H

Analysis Results: 48H

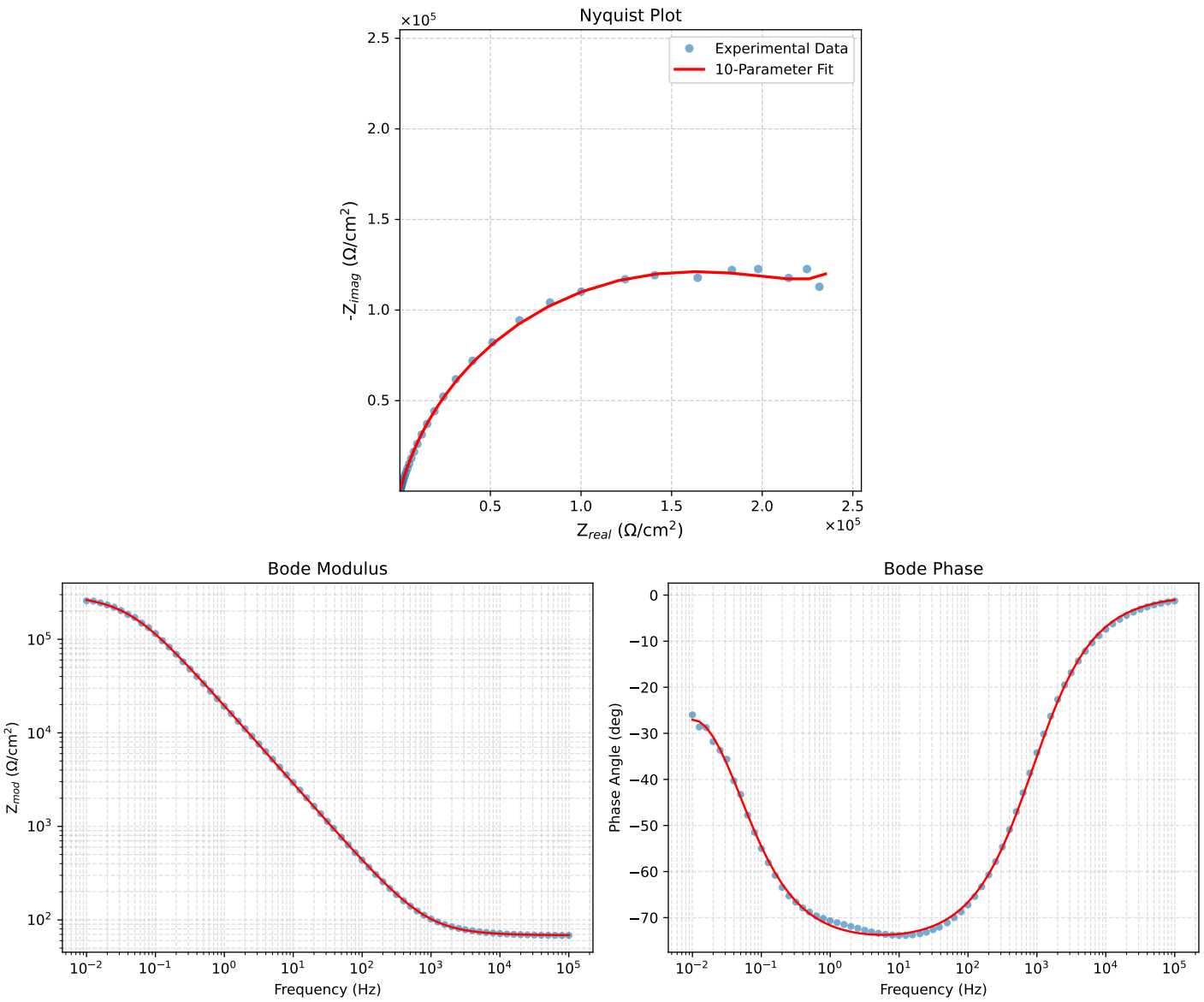

Figure 2: EIS Fit Results for Cauvel_4_NaVO3_48H

Analysis Results: 72H

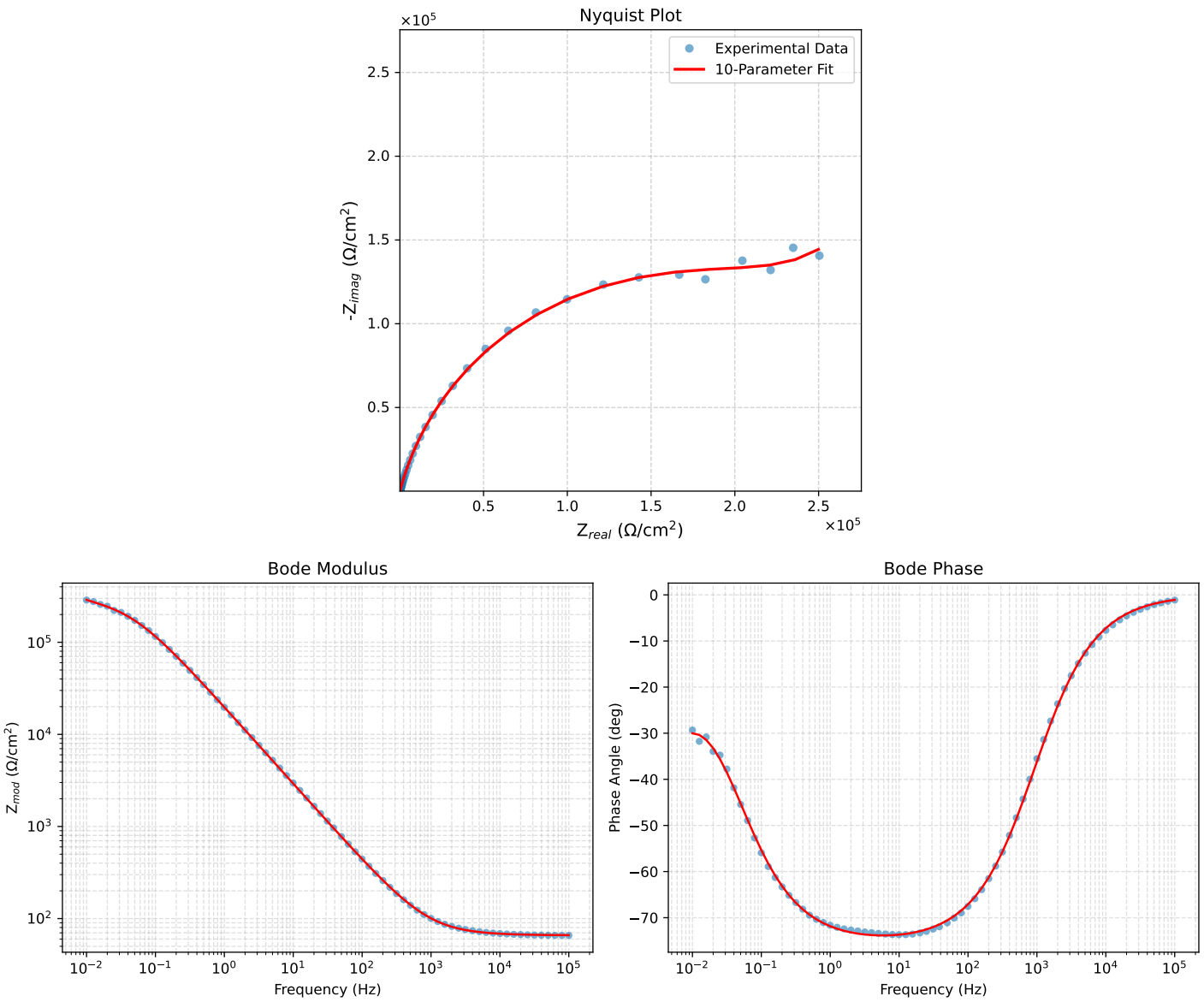

Figure 3: EIS Fit Results for Cauvel_4_NaVO3_72H

Analysis Results: 168H

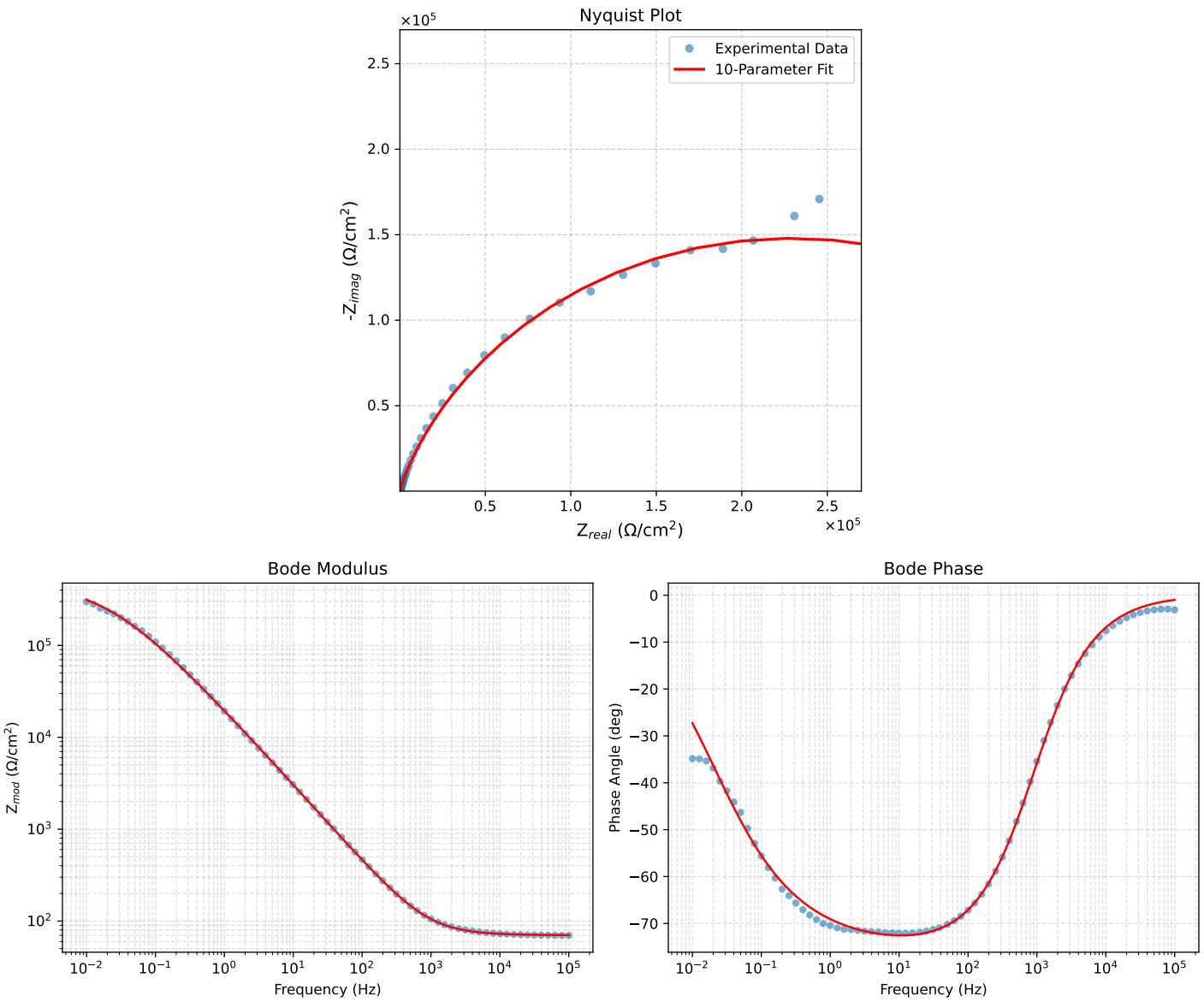

Figure 4: EIS Fit Results for Cauvel_4_NaVO3_168H